Paulmann

Safety Instructions

0, 1, 2, 6, 15

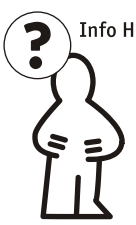

Info Hotline

+49 (0) 5041 998 389

Mon. - Do. 7^{00} - 20^{00}

Fr. 7^{00} - 17^{00}

Paulmann Licht GmbH
31832 Springe / Germany
www.paulmann.com

Art.-Nr.:
178.14

(+MA 173)

PDG06/10

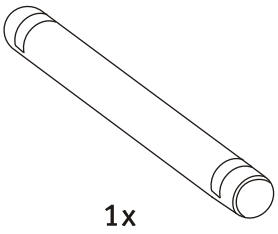

1x

incl

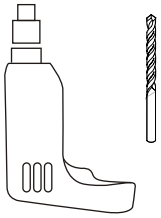

A

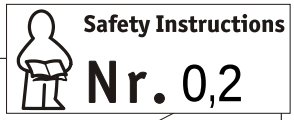

Safety Instructions
Nr. 0,2

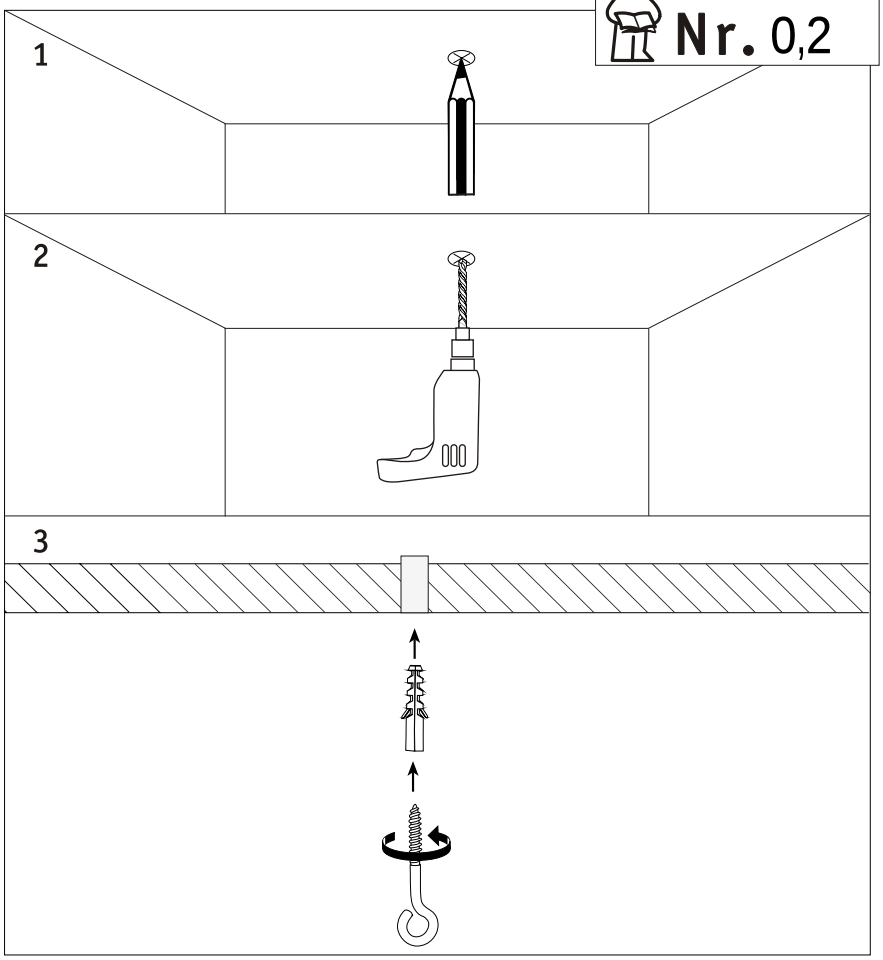

B

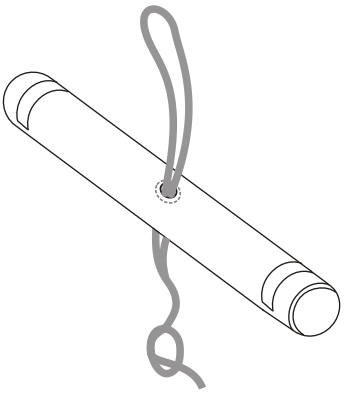

C

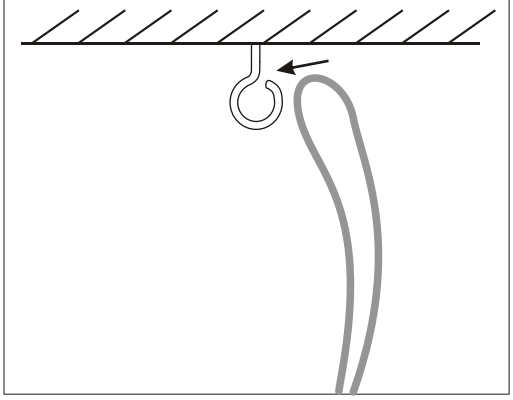
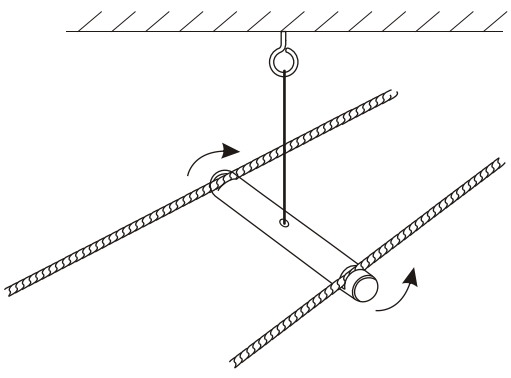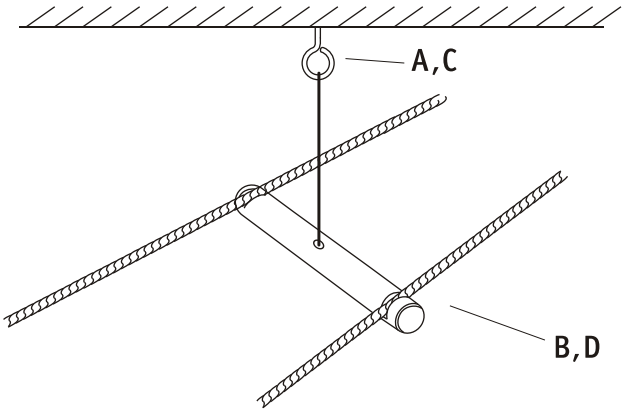
D