Paulmann

Safety Instructions

0, 1, 2, 3, 4, 6, 7, 8 , 9, 11, 15, 20, 22, 25, 26, 27

Info Hotline
+49 (0) 5041 998 389
Mon. - Do. 7⁰⁰ - 20⁰⁰
Fr. 7⁰⁰ - 17⁰⁰

Paulmann Licht GmbH
31832 Springe / Germany
www.paulmann.com

Art.-Nr.:
66307
66308

(+MA 173)

PEA 06/09

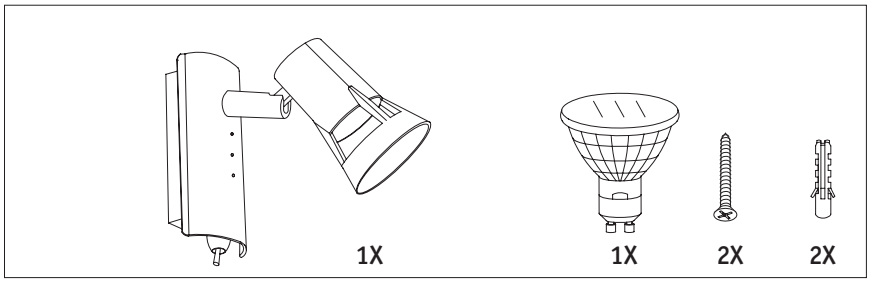

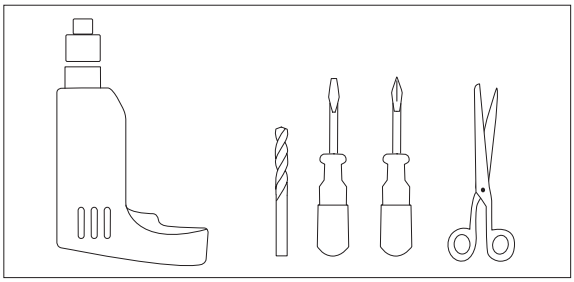

A

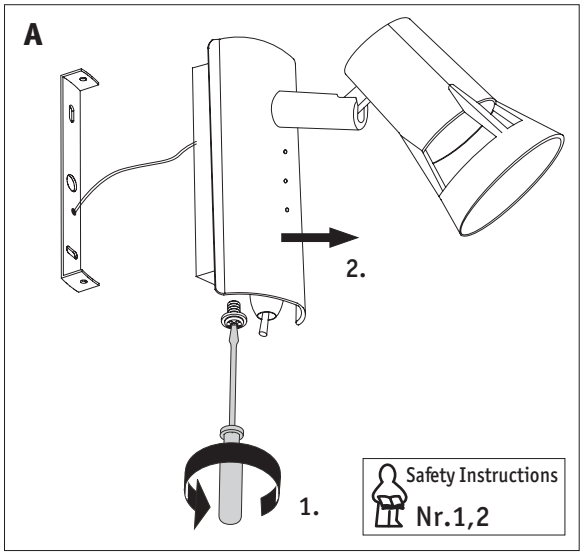

B

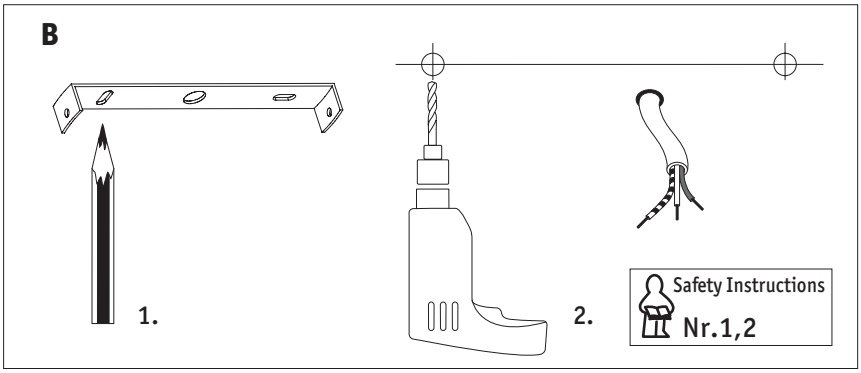

C

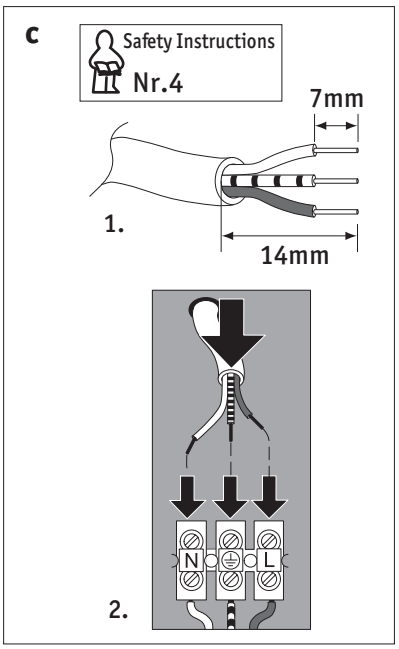

D

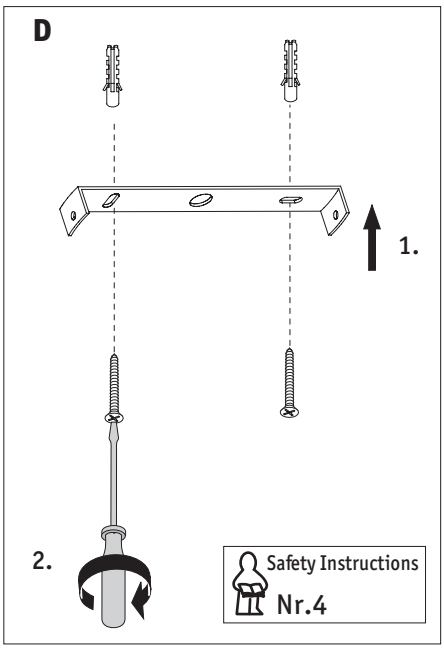

E

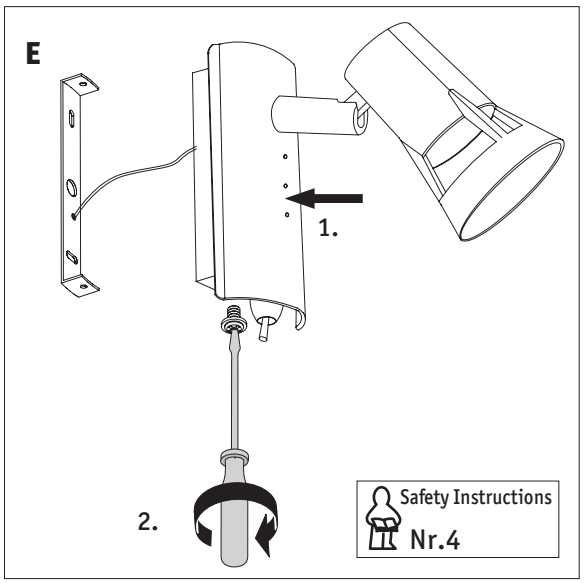

F

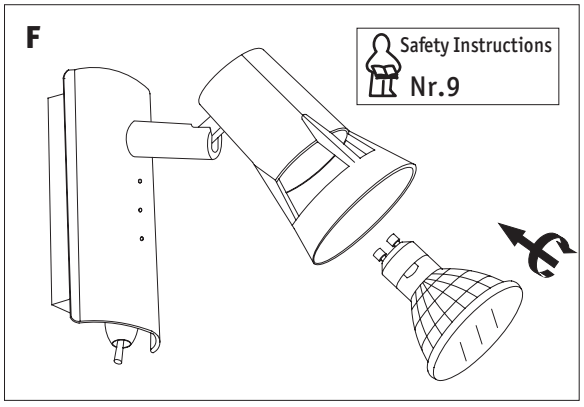
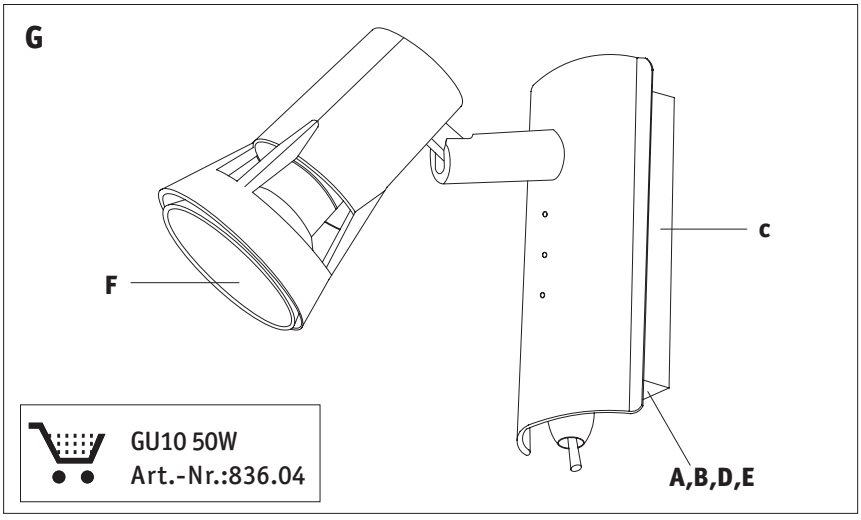
G