Paulmann

Safety Instructions

11, 15, 26, 27

Info Hotline
+49 (0) 5041 998 389
Mon.- Do. 7⁰⁰ - 20⁰⁰
Fr. 7⁰⁰ - 17⁰⁰

Paulmann Licht GmbH
31832 Springe / Germany
www.paulmann.com

Art.-Nr.:
70081
70082

(+MA 173)

PYl 07/09

Safety Instructions
Nr. 11

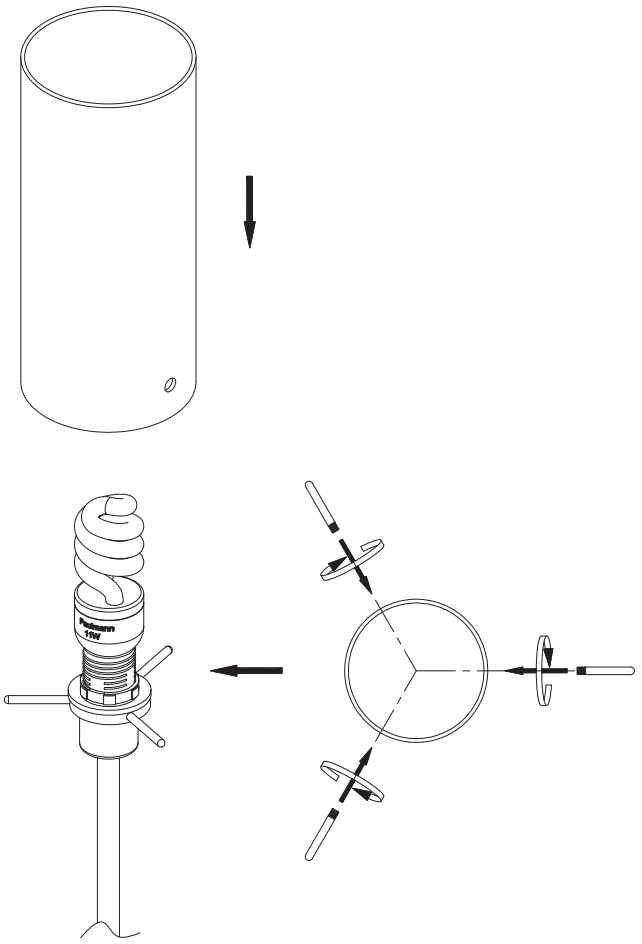
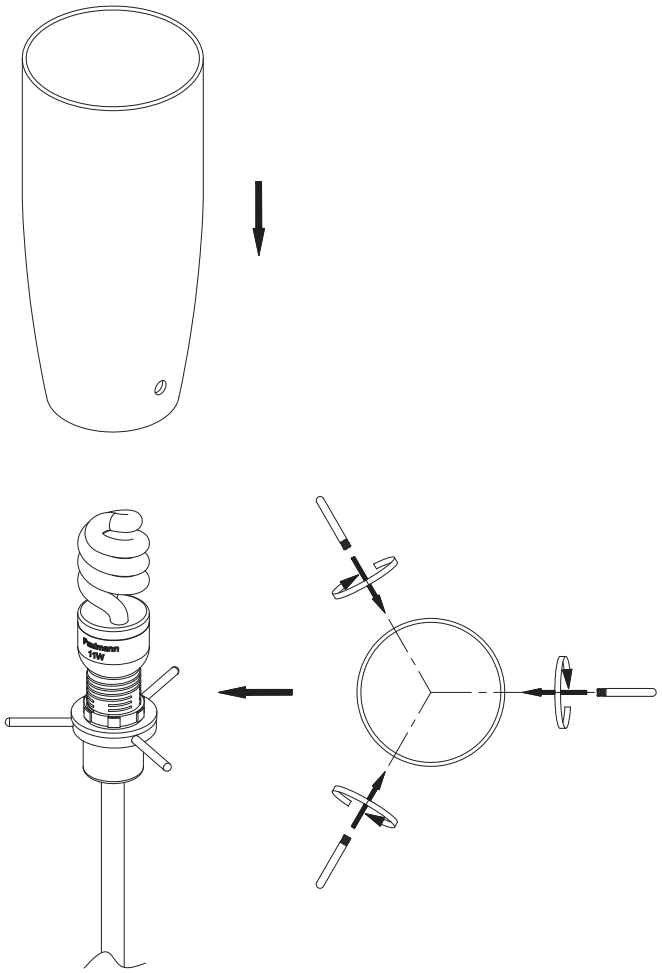
Safety Instructions
Nr. 11