Paulmann

Safety Instructions

0, 6, 7, 8, 11, 15, 22, 27

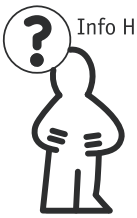

Info Hotline
+49 (0) 5041 998 389
Mon.-Do. 7^{00}-20^{00}
Fr. 7^{00}-17^{00}

Paulmann Licht Gmbh
31832 Springe / Germany
www.paulmann.com

Art.–Nr. :
702.20
702.22
702.23

(+MA 173)
PKE 05/11

702.20

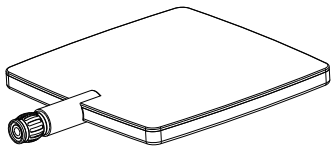

702.22

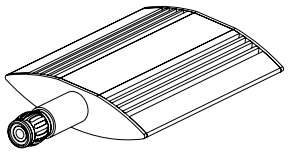

702.23

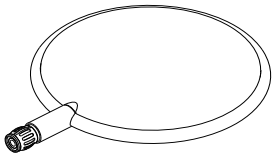

702.20 +702.17/702.18/702.19

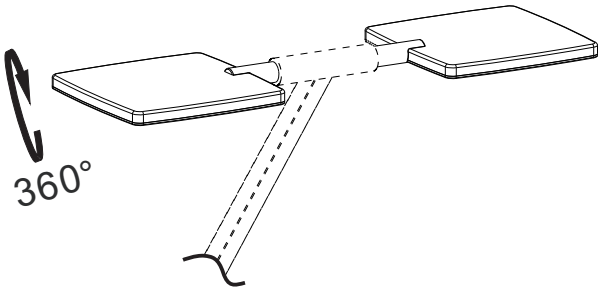

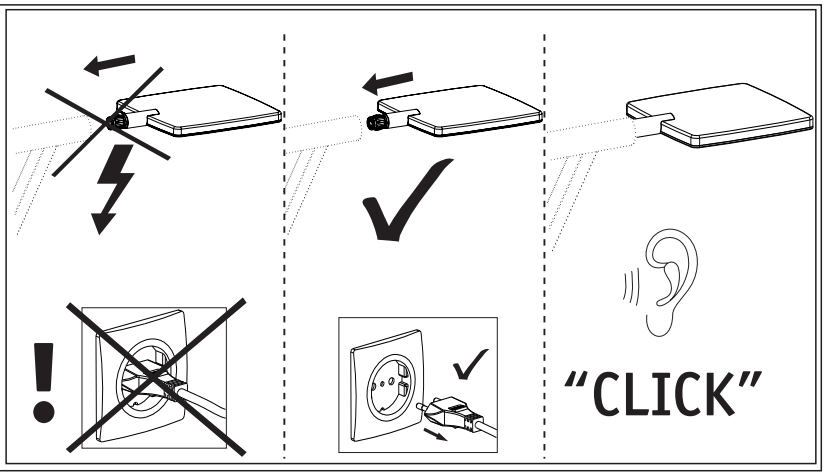

702.22 +702.17/702.18/702.19

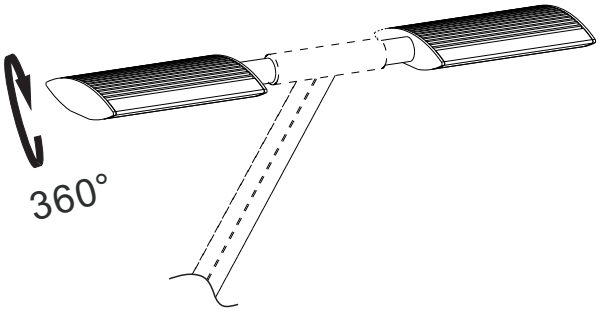

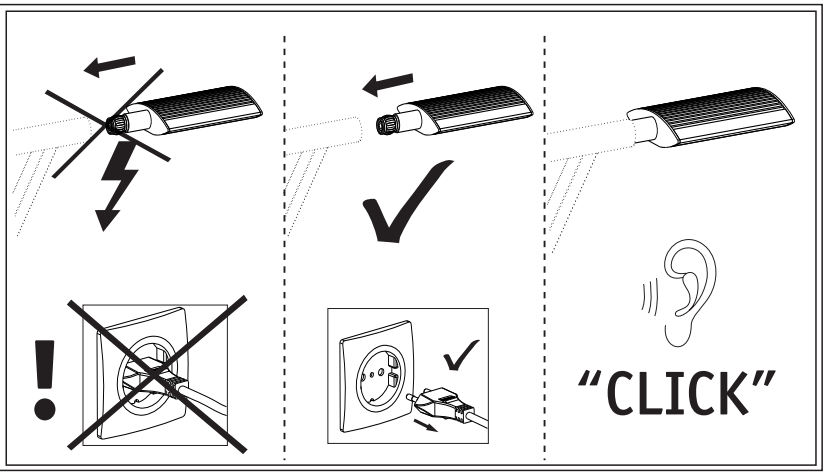
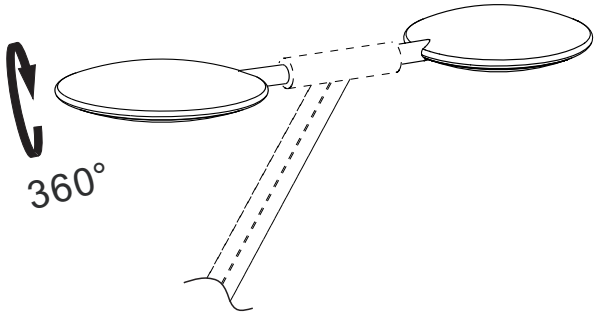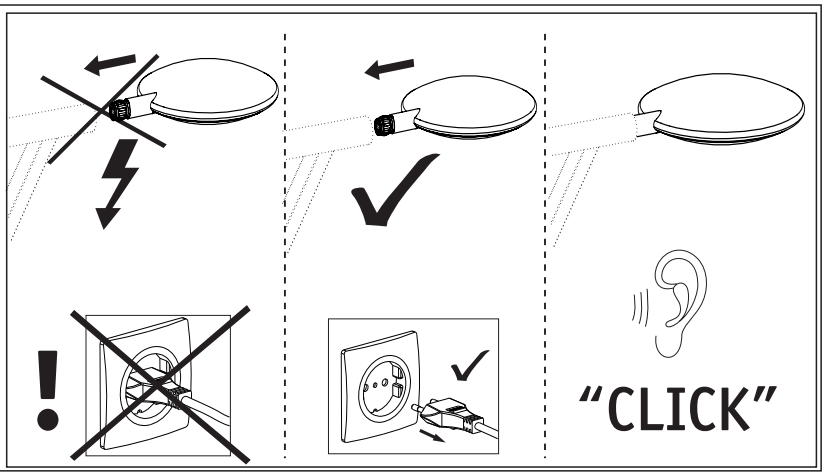
702.23 +702.17/702.18/702.19