SAFETY INSTRUCTIONS

SAFETY INSTRUCTIONS

0,1,2,7,8,9,11,12,15,19,
22,23,26,27

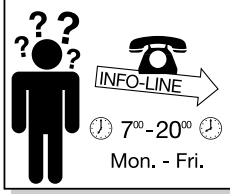

PAULMANN *LICHT* GmbH
Quezinger Feld 2 • D-31832 Springe
www.Paulmann.com
☎ +49 (0) 5041 998 389

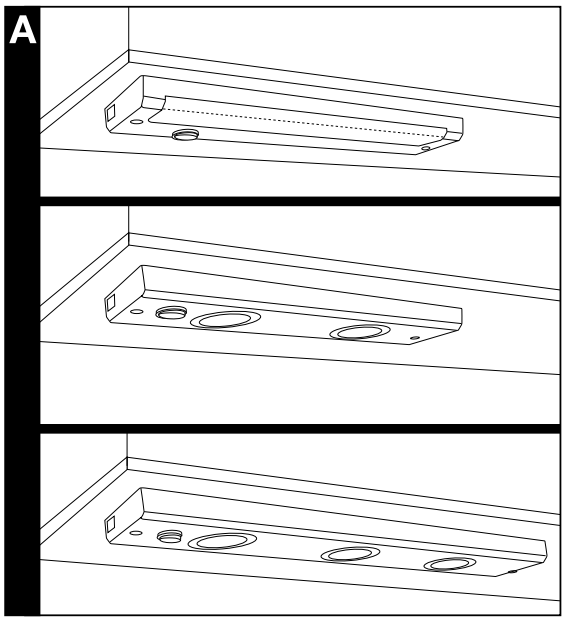

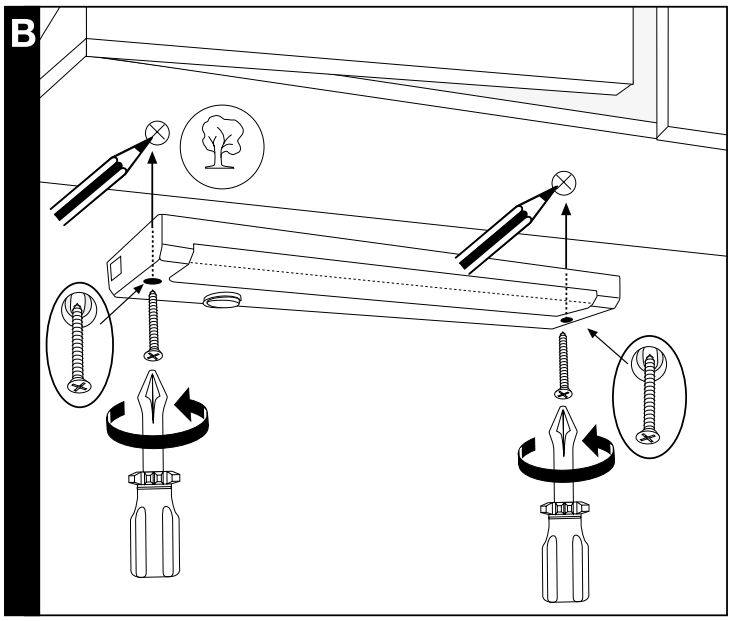

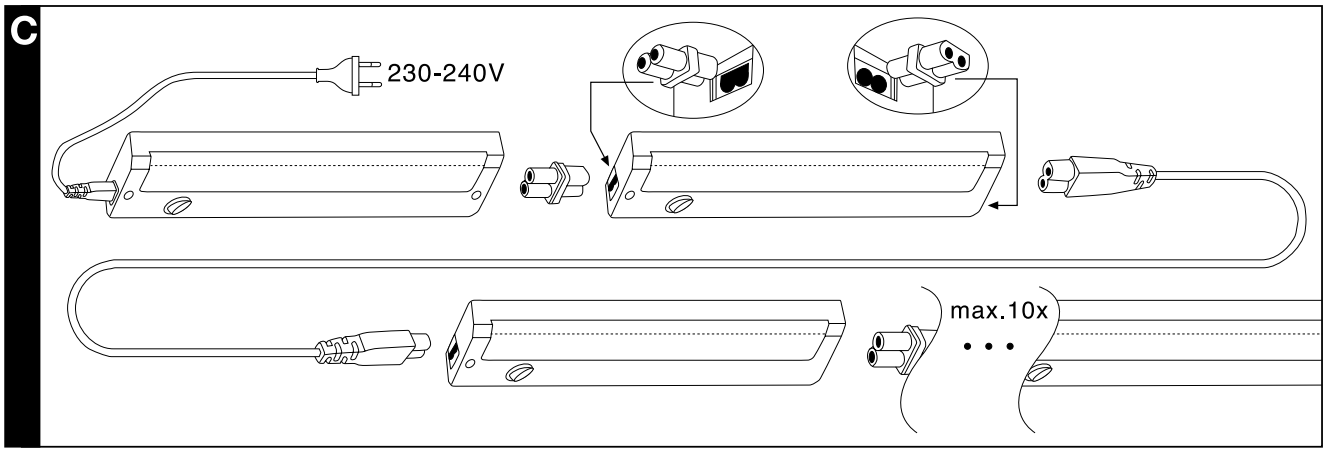

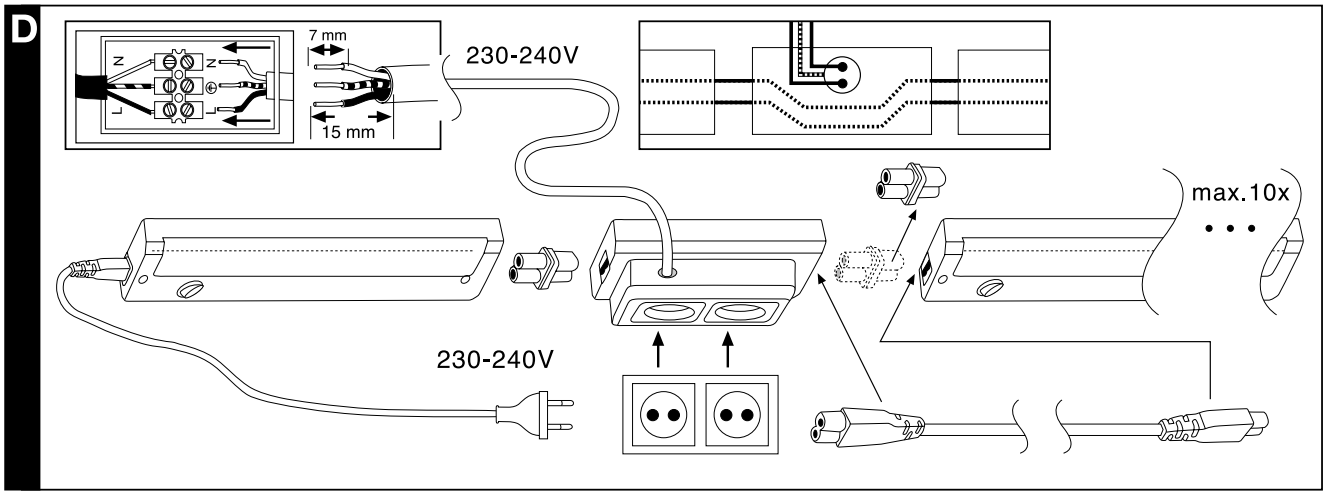

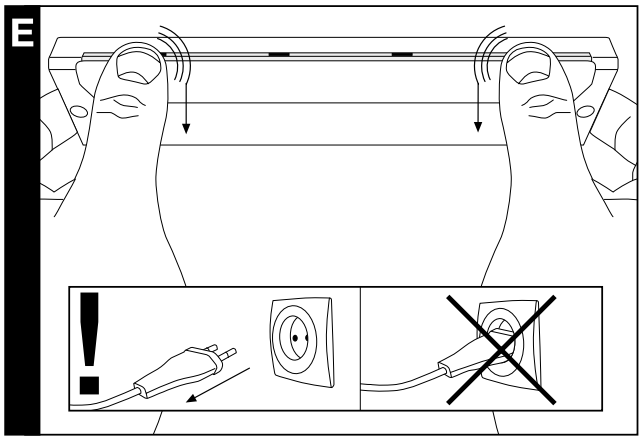
E
!

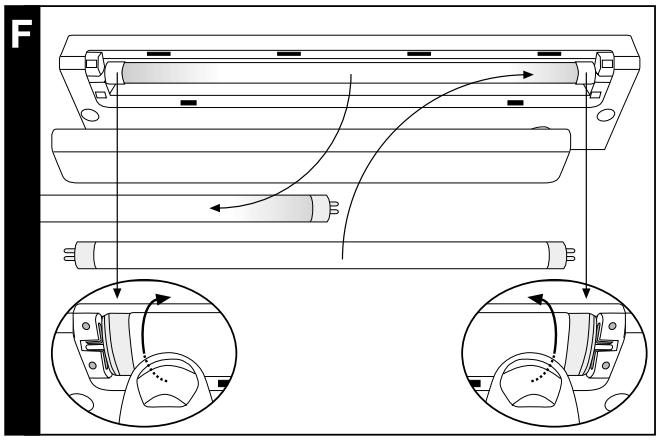
F

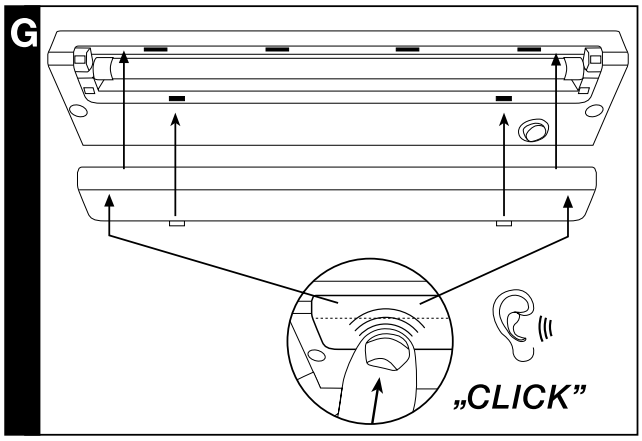
G
„CLICK”

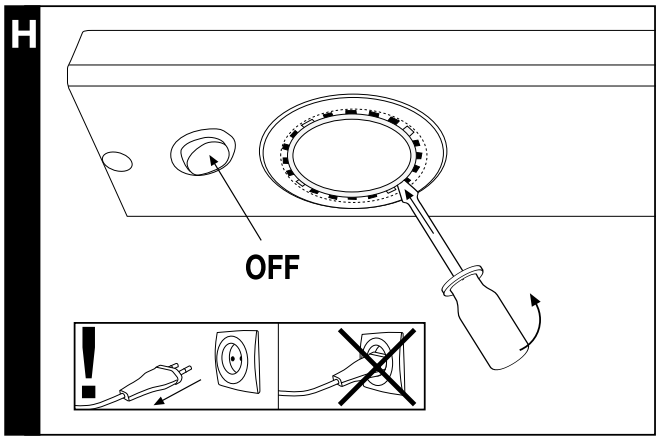
H
OFF
!

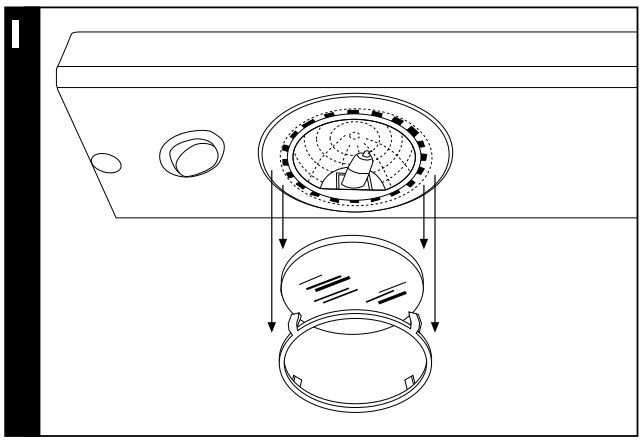
I

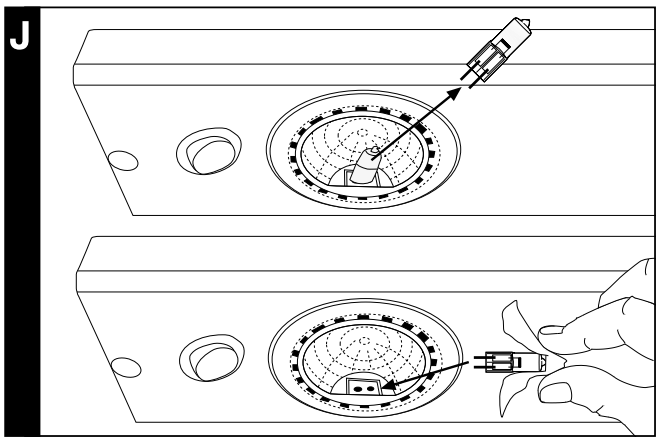
J

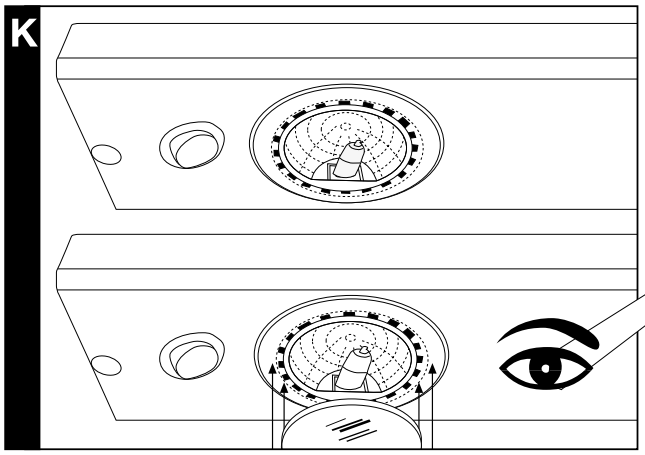
K

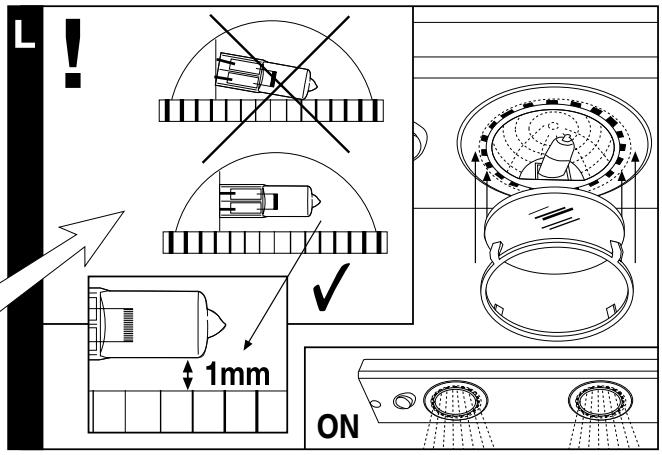
L
!
✓
1mm
ON