FETY INSTRUCTIONS

SAFETY INSTRUCTIONS

0,1,2,4,6,7,8,9,10,11,15,18,22,27...

PAULMANN LICHT GmbH
Quezinger Feld 2·D-31832 Springe
WWW.Paulmann.de

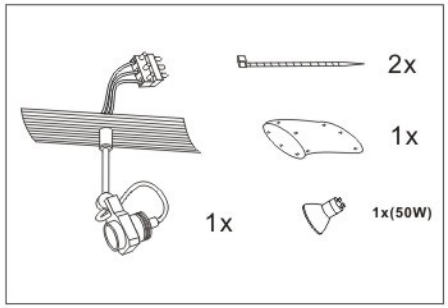

A

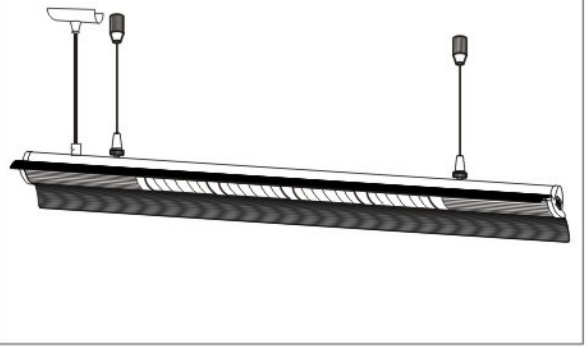

B

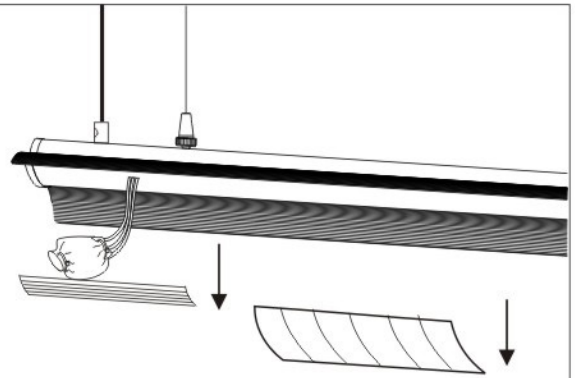

C

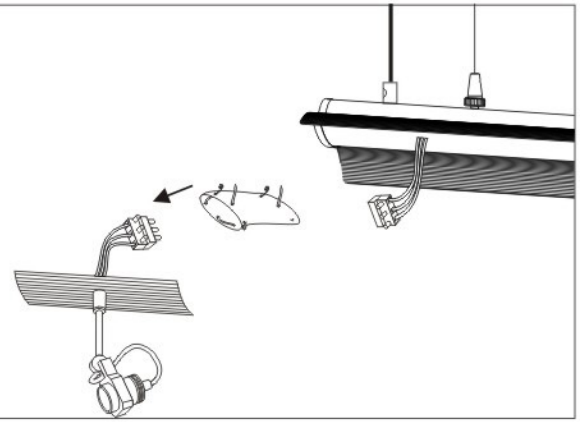

D

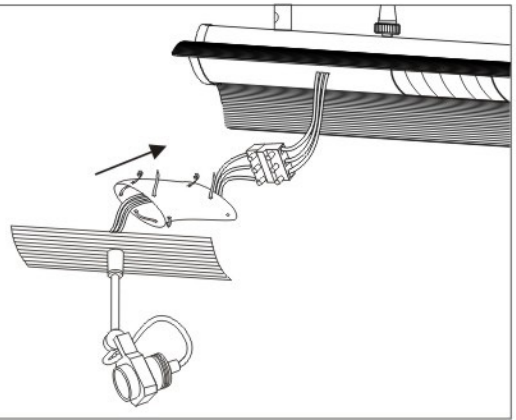

E

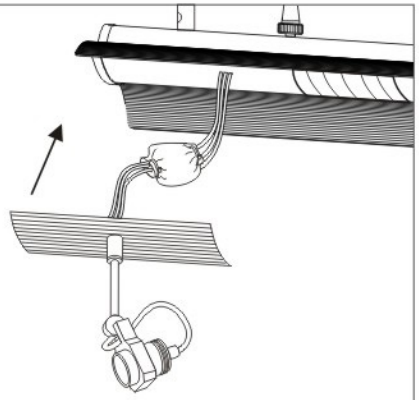

F