SAFETY INSTRUCTIONS

## SAFETY INSTRUCTIONS

0, 1, 2, 4, 6, 7, 8, 9, 11, 15, 20, 22, 27

**PAULMANN** *LICHT* GmbH
Quezinger Feld 2 • D-31832 Springe
**www.Paulmann.de**

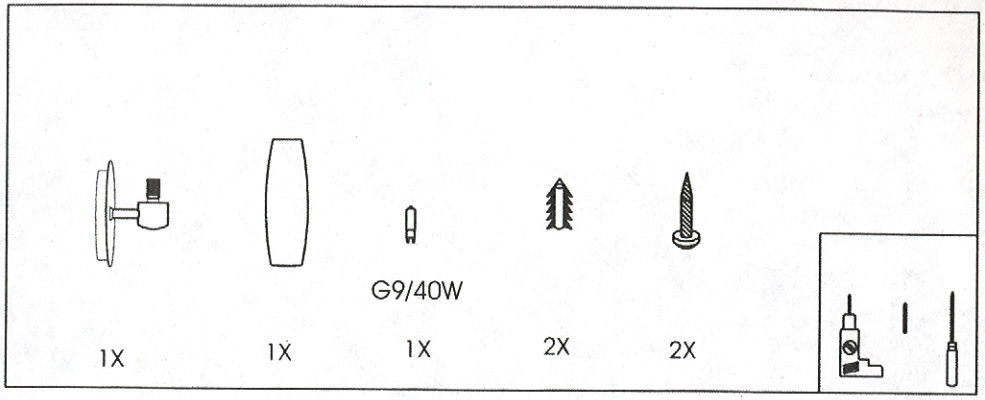


A

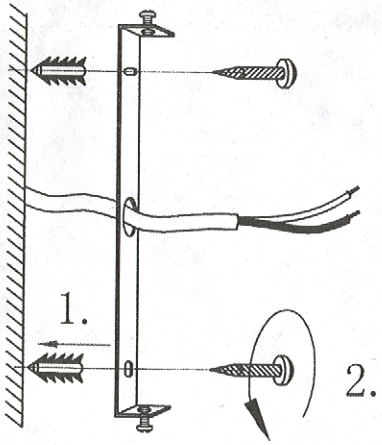


B

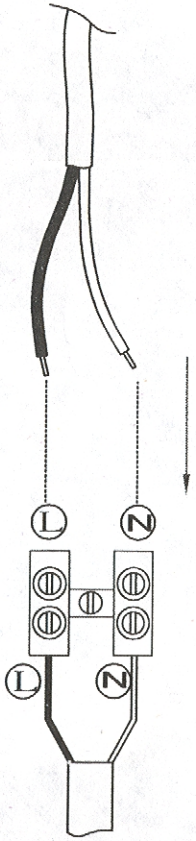


C

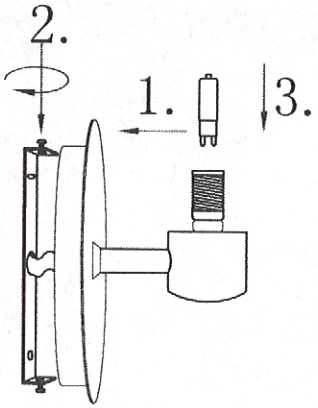

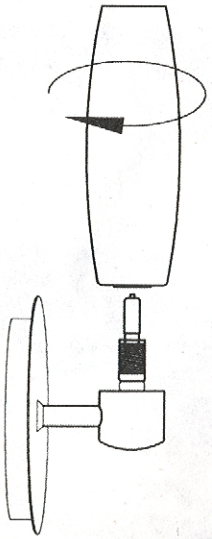
D