SAFETY INSTRUCTIONS

SAFETY INSTRUCTIONS

0, 1, 2, 4, 6, 7, 8, 9, 11, 15, 20, 22, 27

PAULMANN *LICHT* GmbH
Quezinger Feld 2 • D-31832 Springe
www.Paulmann.com

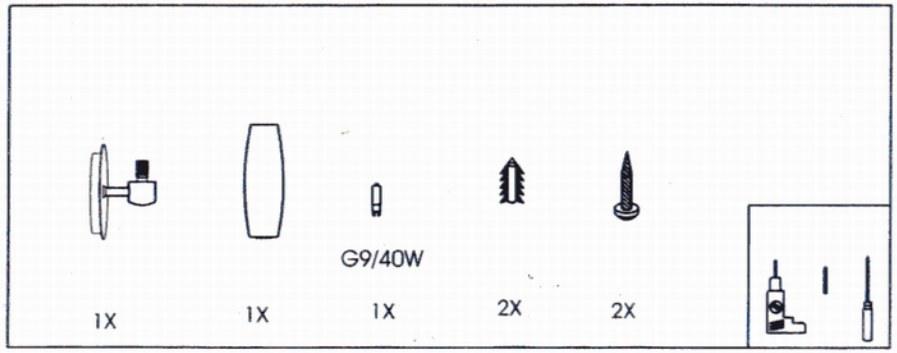

A

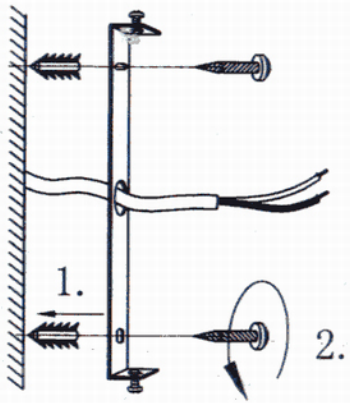

B

C

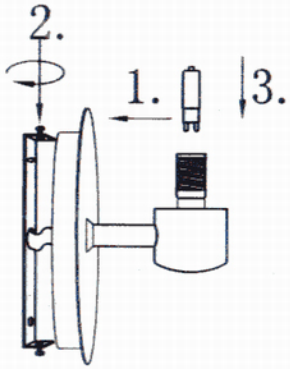
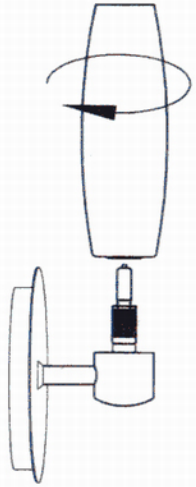
D