Art. Nr:79282/79286
(+MA 173)

Paulmann

SAFETY INSTRUCTIONS

SAFETY INSTRUCTIONS

0, 1, 2, 7, 8, 11, 15, 22, 28

PAULMANN *LICHT* GmbH
Quezinger Feld 2 • D-31832 Springe
www.Paulmann.com
INFO-LINE
☎ +49 (0) 5041 998 389
7⁰⁰-20⁰⁰
Mon. - Fri.

1x75W

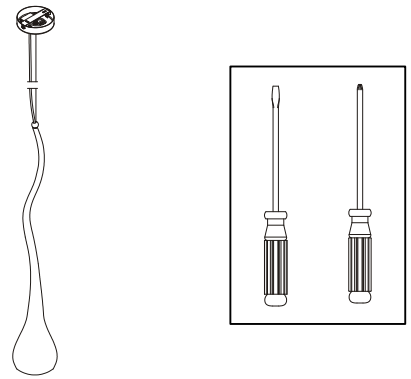

A

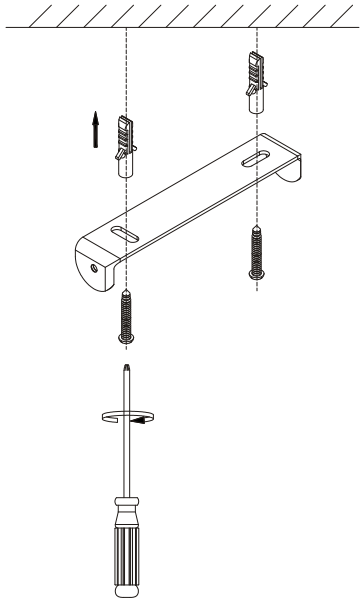

B

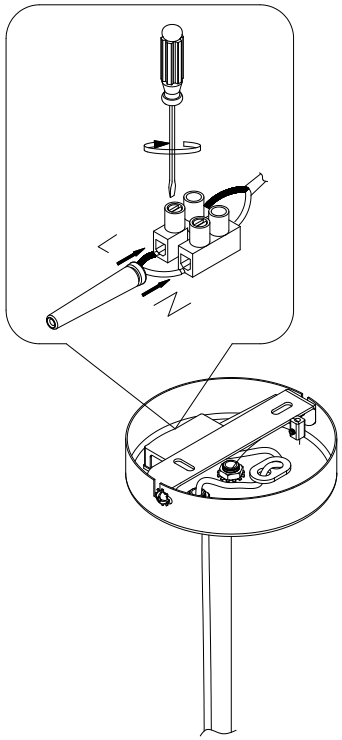

C

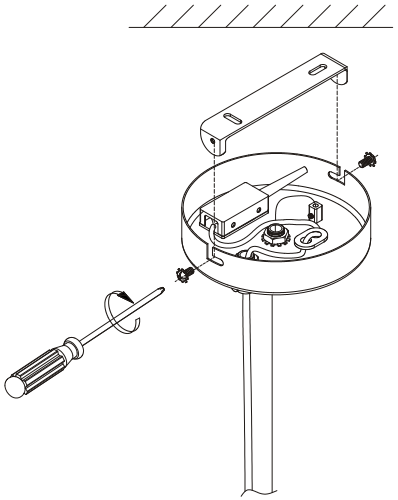
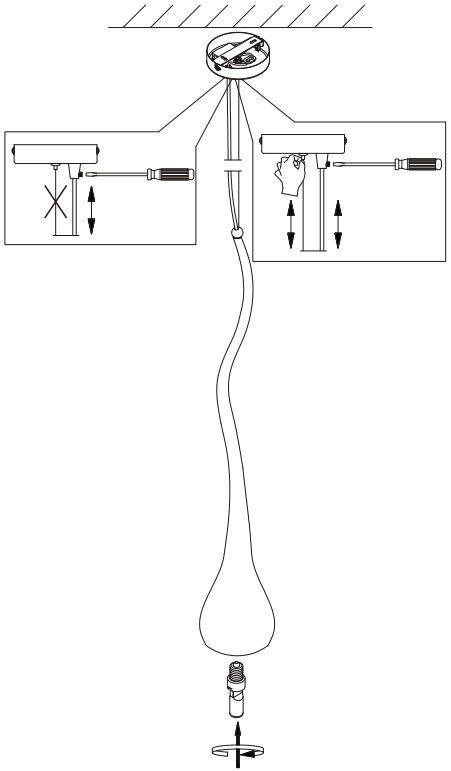
D