Safety Instructions

0,1,4,6,7,8,11,15,22,28,

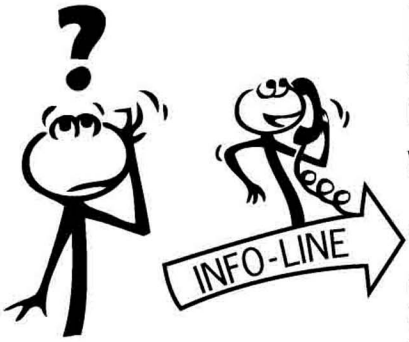

Paulmann Licht GmbH
Quezinger Feld 2
D-31832 Springe
www.paulmann.com
☎ +49 (0) 5041 998 389
Mon.-Do. 7⁰⁰-20⁰⁰
Fr. 7⁰⁰-17⁰⁰

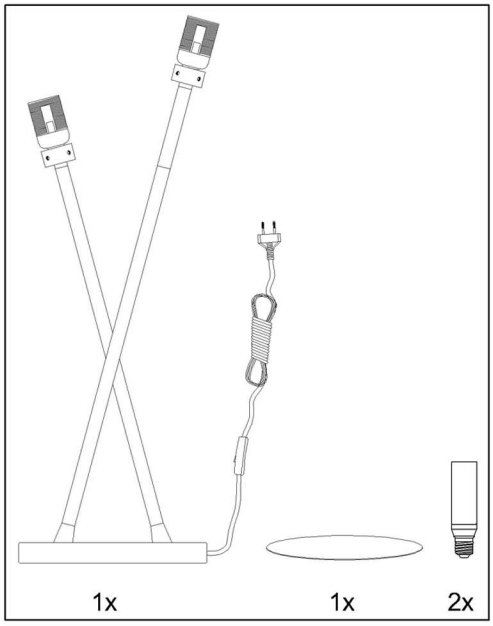

A

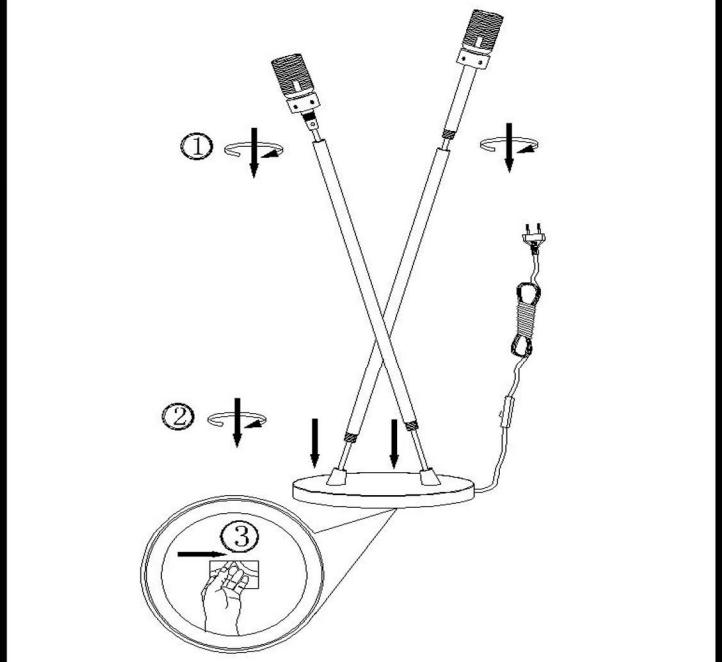

B

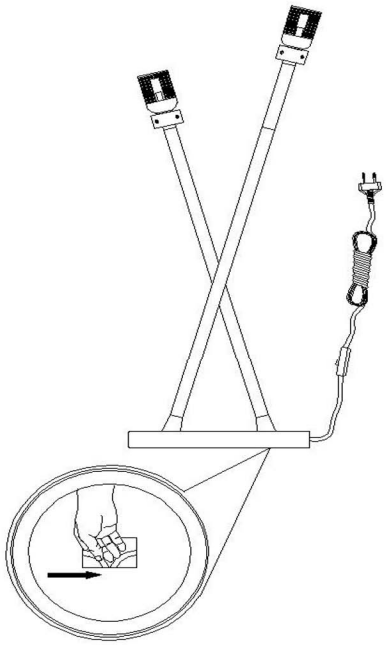

C

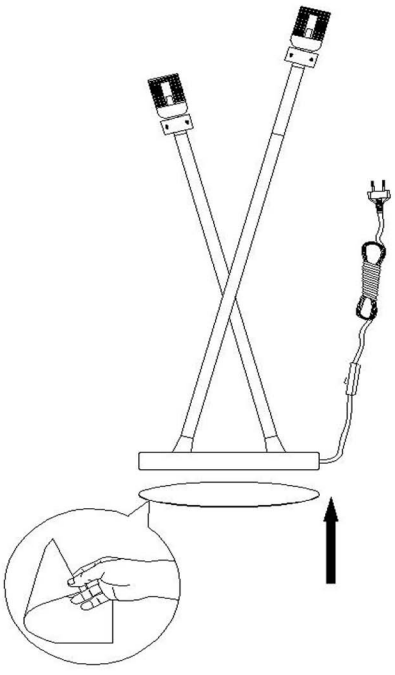

D

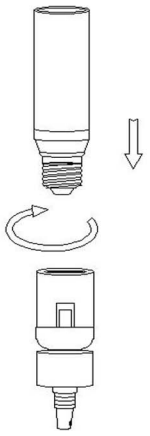
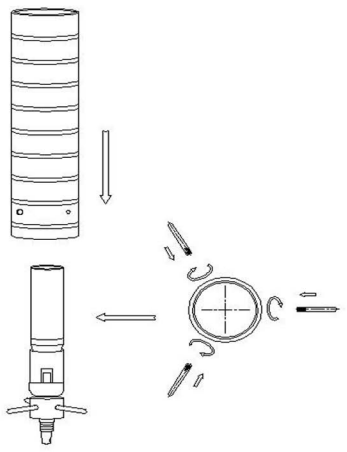
E