Paulmann

Safety Instructions

0,1,2,3,4,6,7,11,15,
16,17,22,25,

Info Hotline
+49 (0) 5041 998 389
Mon. - Do. 7⁰⁰ - 20⁰⁰
Fr. 7⁰⁰ - 17⁰⁰

Paulmann Licht GmbH
31832 Springe /Germany
www.paulmann.com

Art.-Nr.:
925.11
925.12

(+MA 197)

PSU 06/10

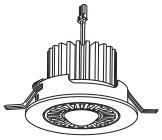
1X

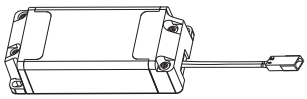
1X

Incl.

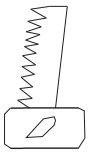

A

925.11 (∅86mm)

925.12 (∅70mm)

Safety Instructions
Nr. 0,2

B

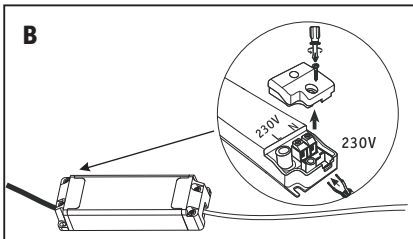

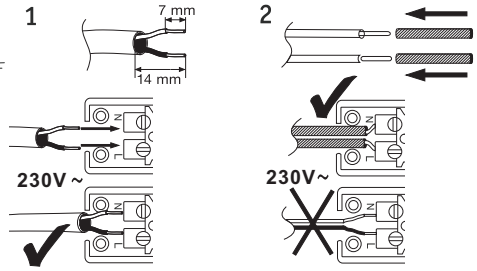

Safety Instructions
Nr. 0,3,4

C

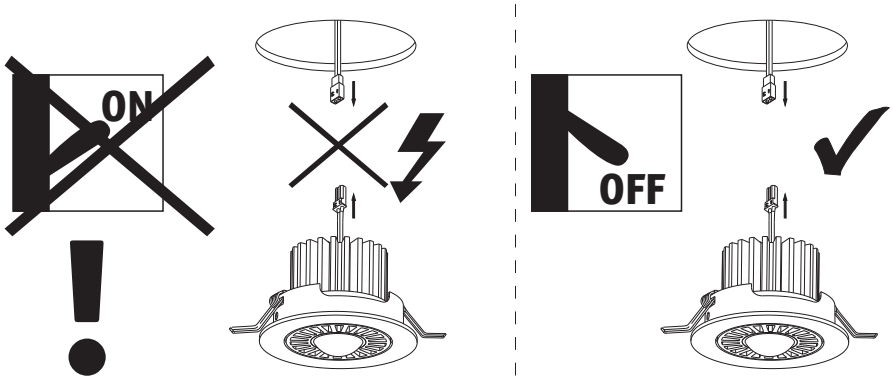

D

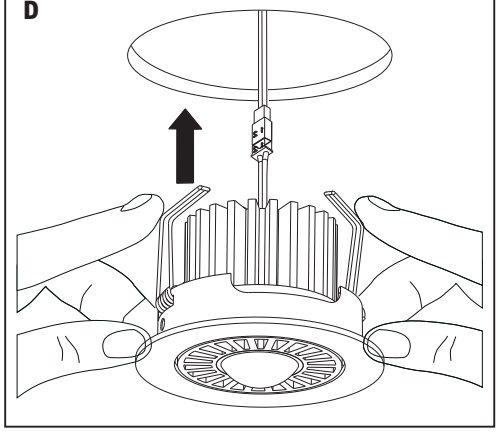

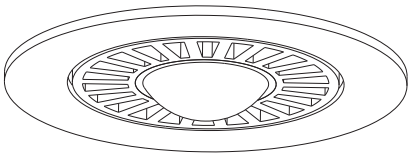
A,B,C,D.....

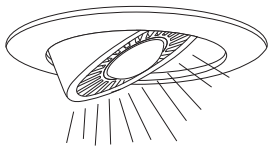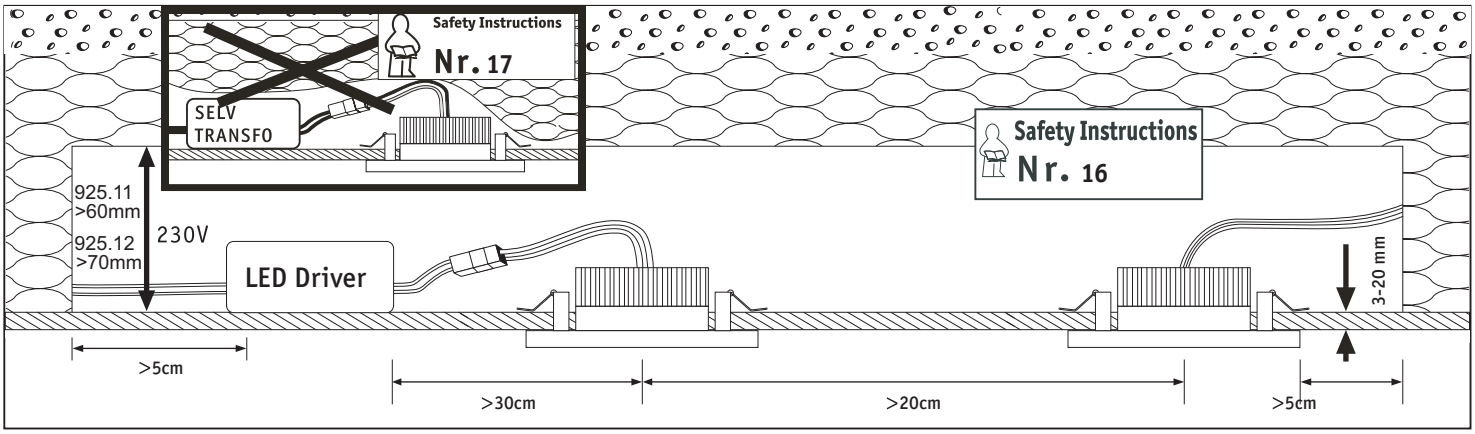
30°