Paulmann

Safety Instructions

0,1,2,3,4,6,7,11,15,
16,17,22,25,

Info Hotline
+49 (0) 5041 998 389
Mon. - Do. 7⁰⁰ - 20⁰⁰
Fr. 7⁰⁰ - 17⁰⁰

Paulmann Licht GmbH
31832 Springe /Germany
www.paulmann.com

Art.-Nr.:
925.13

(+MA 197)

PSU 06/10

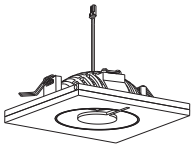
1X

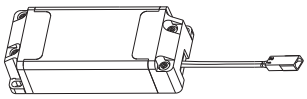
1X

Incl.

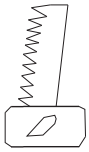

A

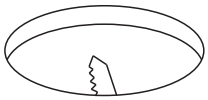

(∅110mm)

Safety Instructions
Nr. 0,2

B

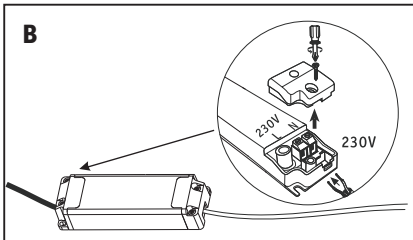

Safety Instructions
Nr. 0,3,4

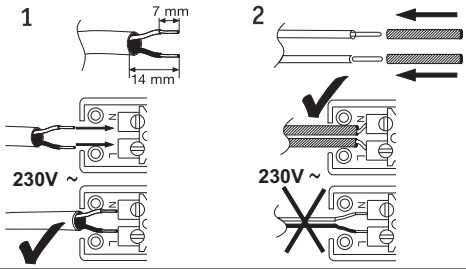

C

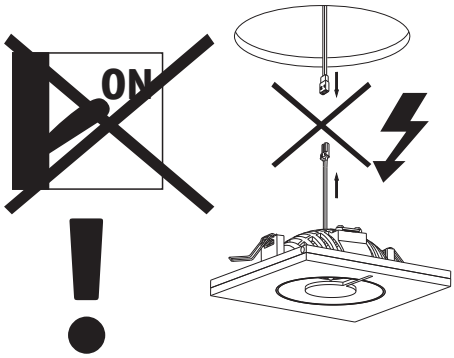

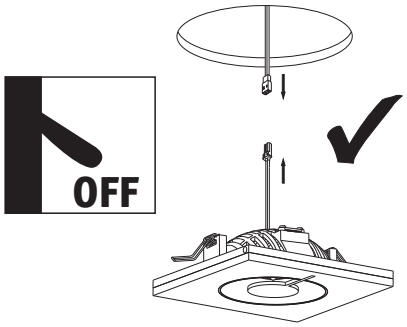

D

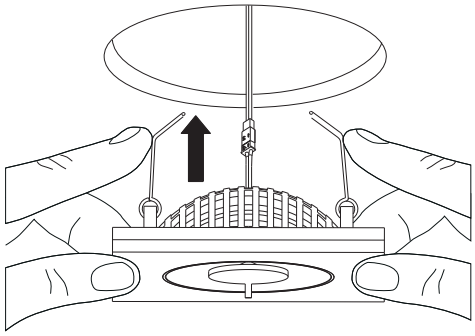

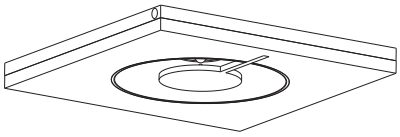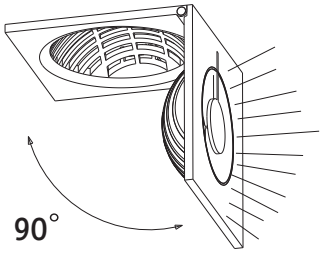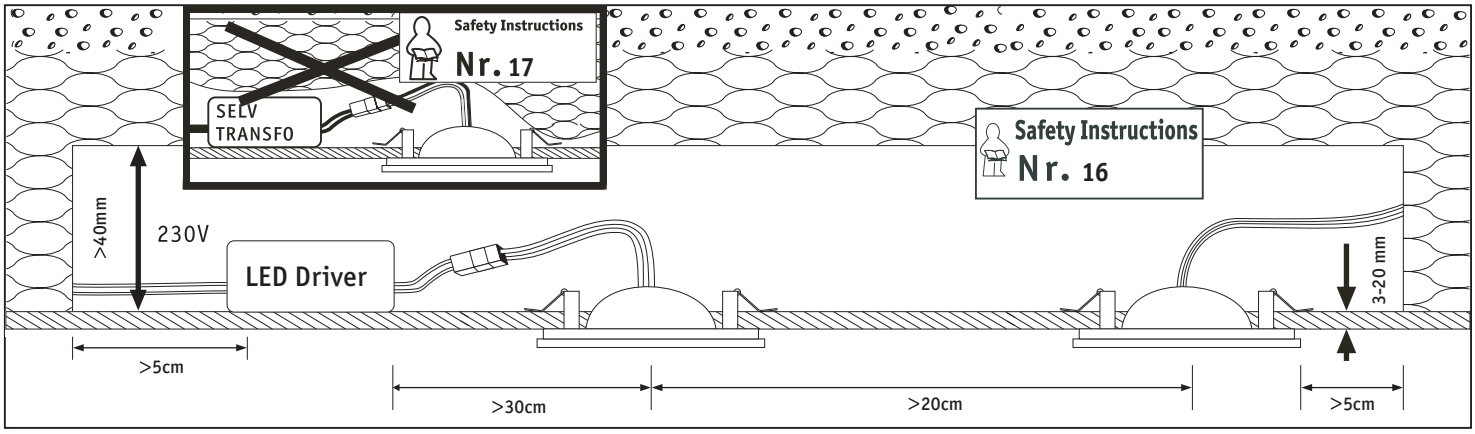
A,B,C.....