Paulmann

Safety Instructions

0,1,4,6,7,8,9,11,15,20,
22,23,26,27

Info Hotline
+49 (0) 5041 998 389
Mon.- Do. 7⁰⁰ - 20⁰⁰
Fr. 7⁰⁰ - 17⁰⁰

Paulmann Licht GmbH
31832 Springe / Germany
www.paulmann.com

Art.-Nr.:
950. 07
950. 08

(+MA 173)
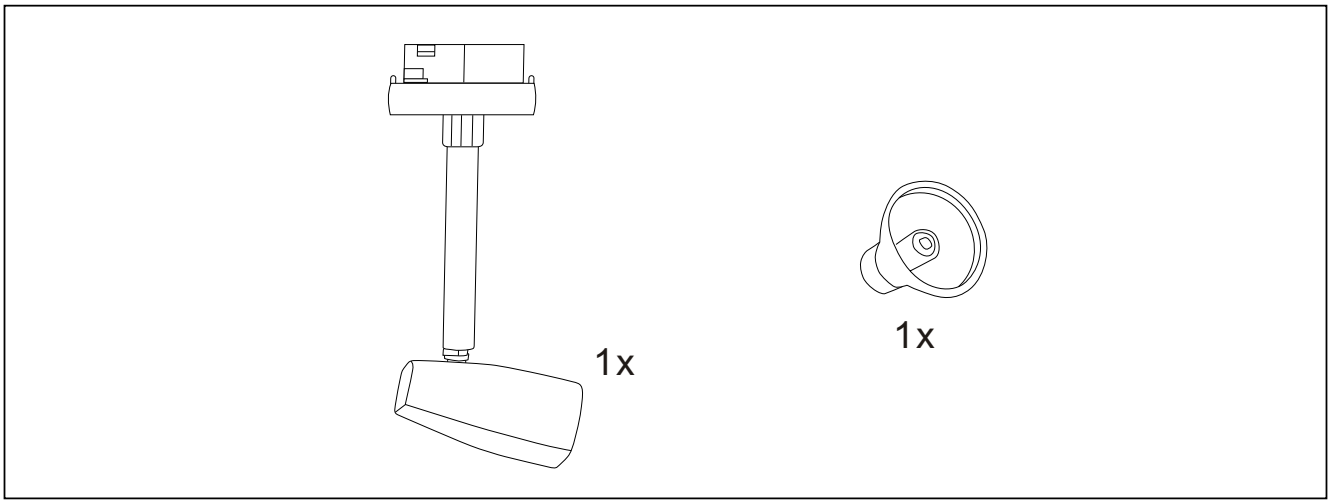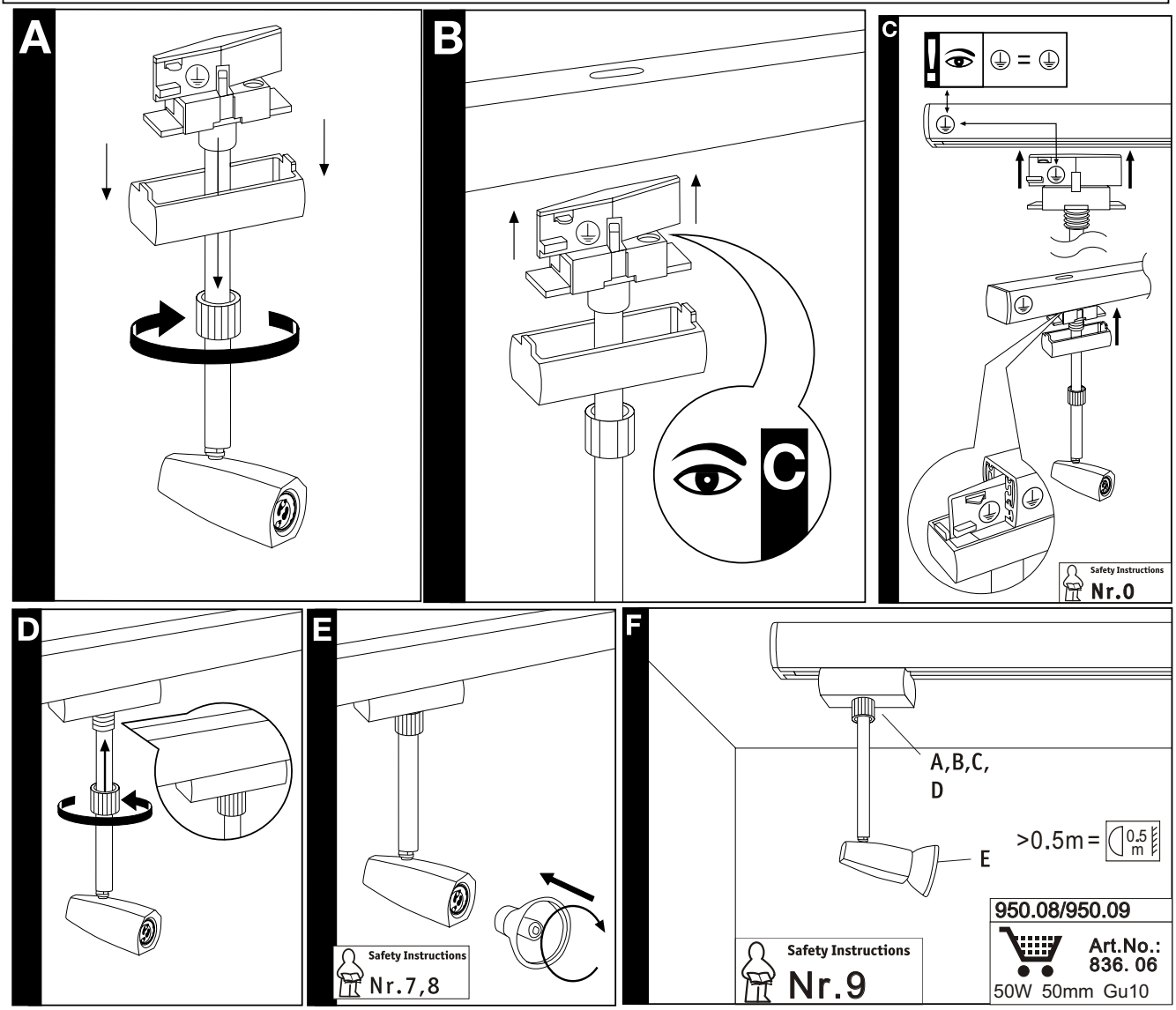
PH 12/09