Paulmann

Safety Instructions

0,1, 2, 3, 4, 6, 7, 8, 9 ,10, 11,12,15,16,17,18,19,20, 21,22,23,24,25,26,27

Info Hotline +49 (0) 5041 998 389
Mon.-Do. 7⁰⁰-20⁰⁰
Fr. 7⁰⁰-17⁰⁰

Paulmann Licht GmbH
31832 Springe / Germany
www.paulmann.com

Art.-Nr.:
97131
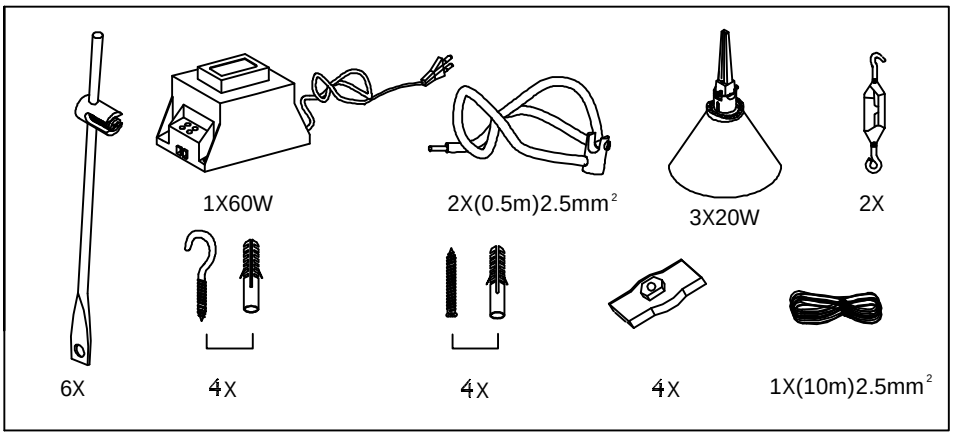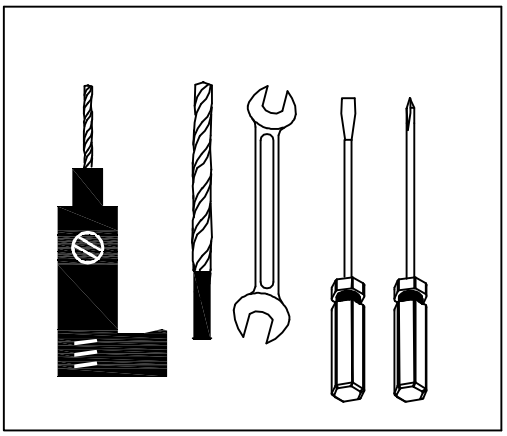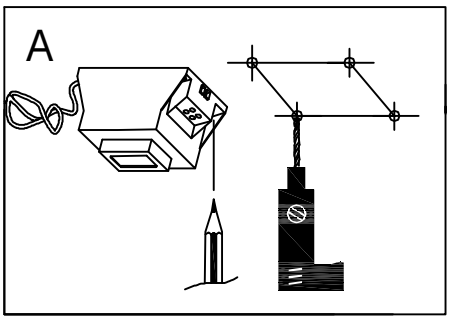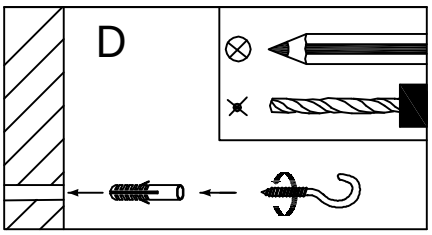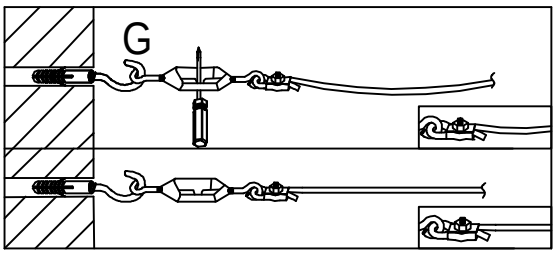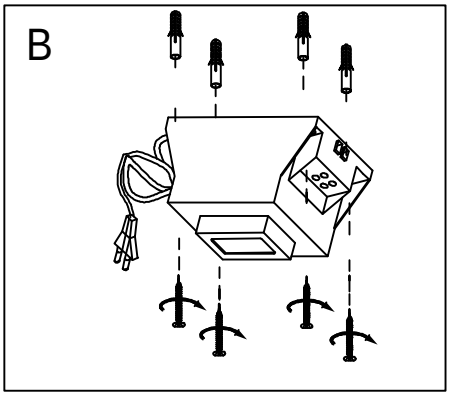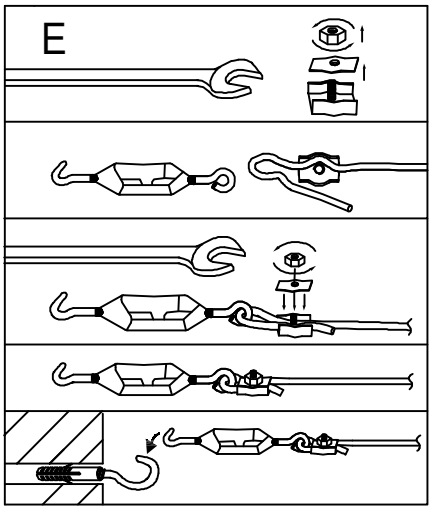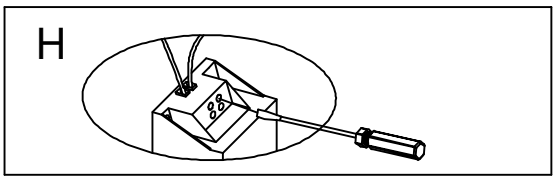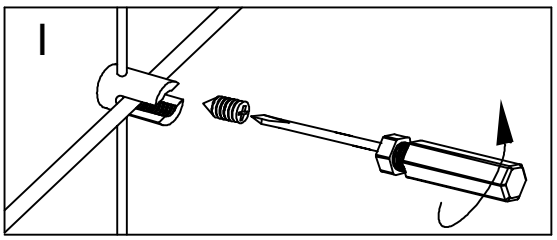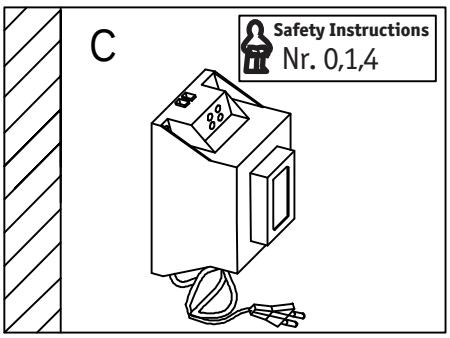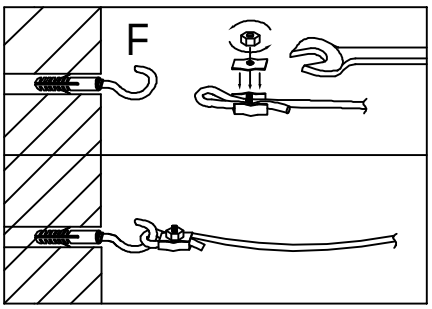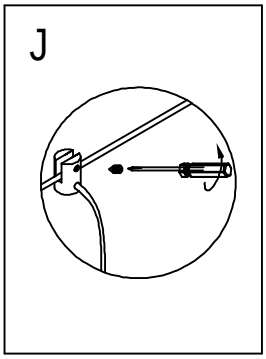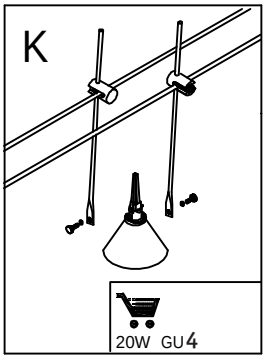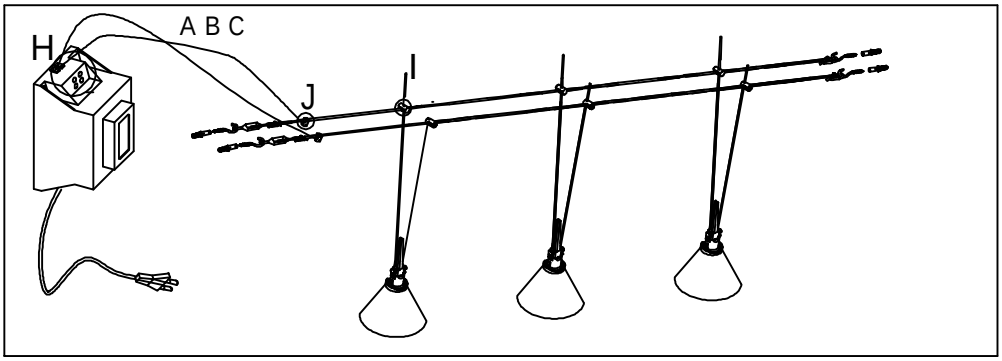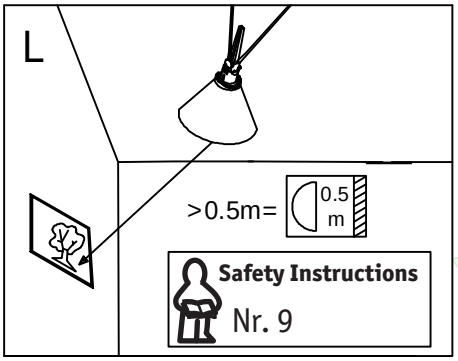
(+MA 173)
PCK07/09