Art.-Nr.975.59
(+MA 173)

Paulmann

SAFETY INSTRUCTIONS

SAFETY INSTRUCTIONS

0, 1, 2, 3,4, 5a, 6, 7, 8, 9, 10, 11, 12, 13, 14, 15

16, 17, 18, 19, 20, 21, 22, 23, 24, 25, 26, 27, 28

PAULMANN *LICHT* GmbH
Quezinger Feld 2 • D-31832 Springe
www.Paulmann.com
INFO-LINE
☎ +49 (0) 5041 998 389
7⁰⁰ - 20⁰⁰ Mo. - Do.
7⁰⁰ - 17⁰⁰ Fr.

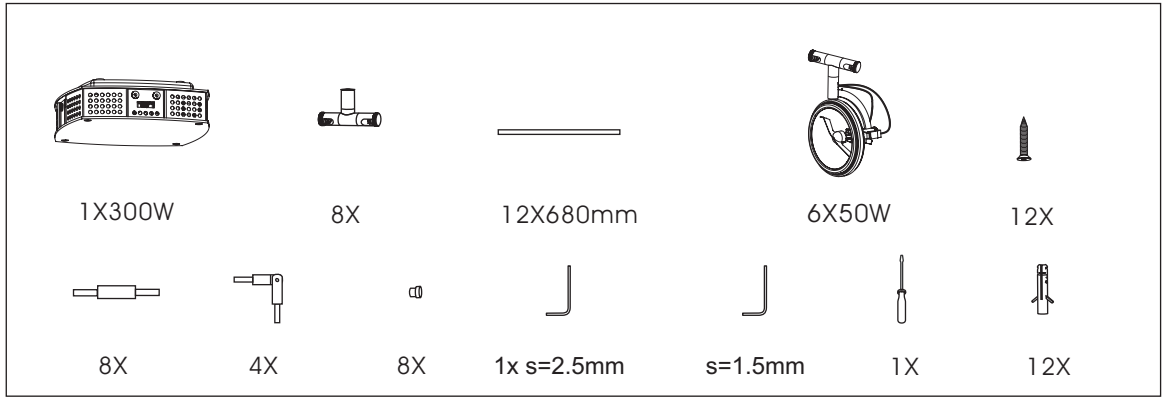

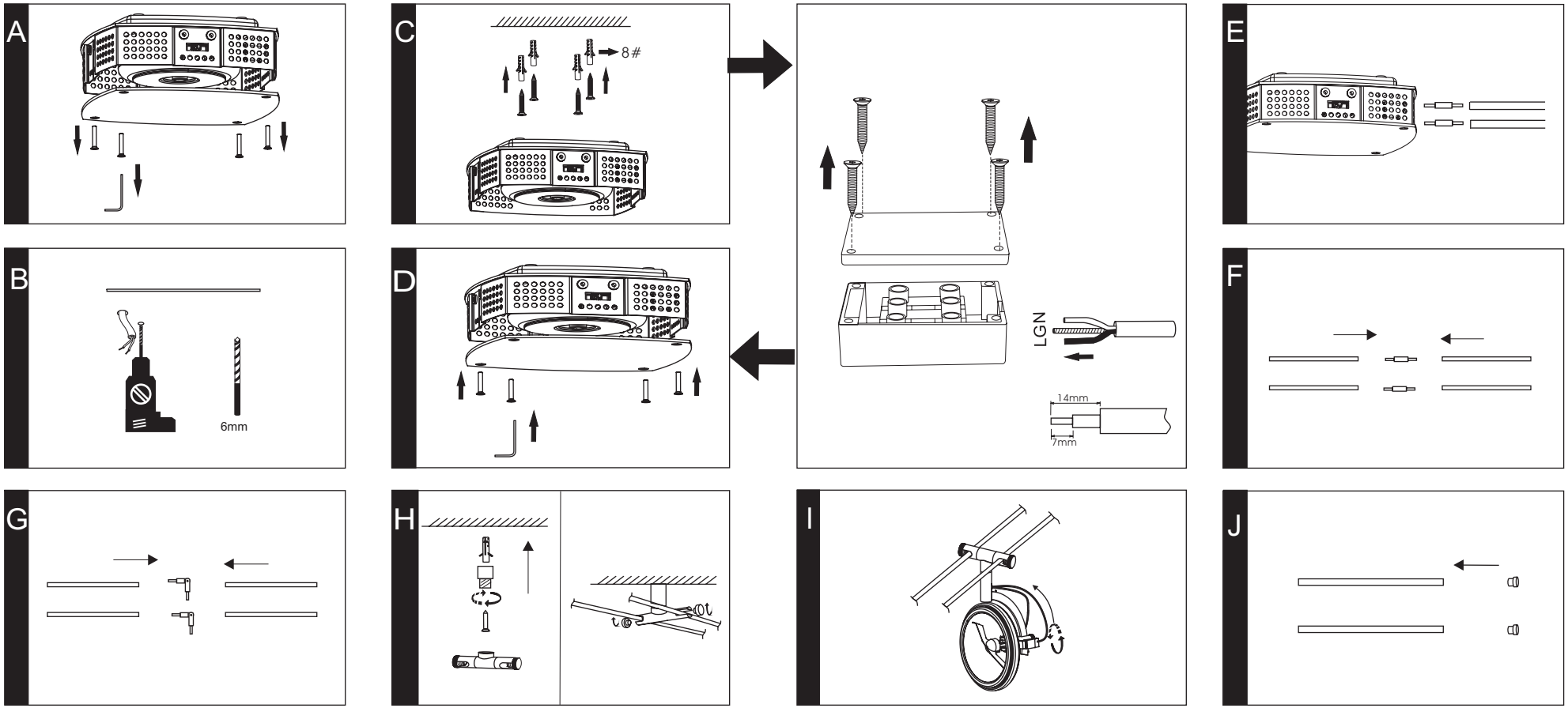

!!! Max. 200W !!!

!!! Max. 200W !!!

!!! Max. 200W !!!
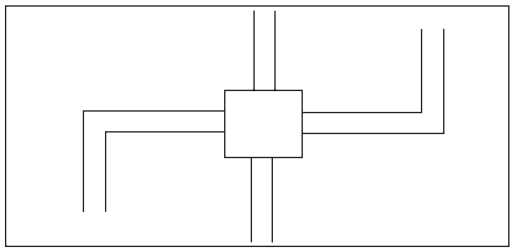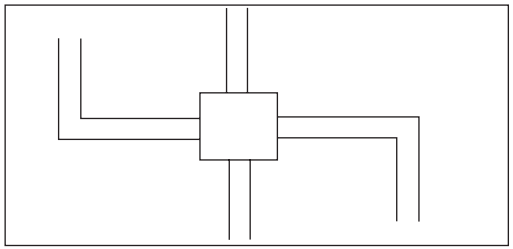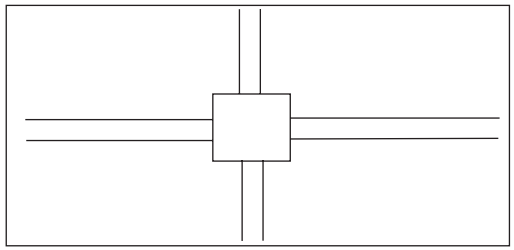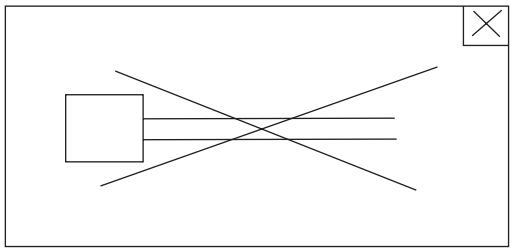
!!! Max. 200W !!!