Paulmann

Safety Instructions

0,1,4,5b,6,7,8,9,10,11
12,15,16,17,19,20,21
22,23,25

Info Hotline
+49 (0) 5041 998 389
Mon.-Do. 7⁰⁰-20⁰⁰
Fr. 7⁰⁰-17⁰⁰

Paulmann Licht GmbH
31832 Springe / Germany
www.paulmann.com

Art.-Nr.:
988.17/19
989.24/26/27/
28/29/61/67

(+MA 173)
PBO 07/12

988.17 988.19	989.24 989.26 989.27	989.28 989.29 989.61	989.67
5x incl.		3x incl.	6x incl.
5x 5x 1x	1x 1x	3x 3x 1x	6x 6x 2x

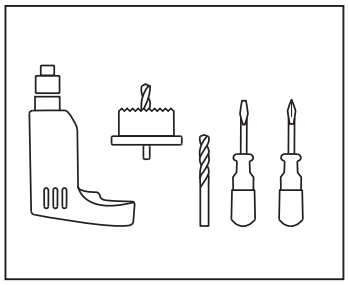

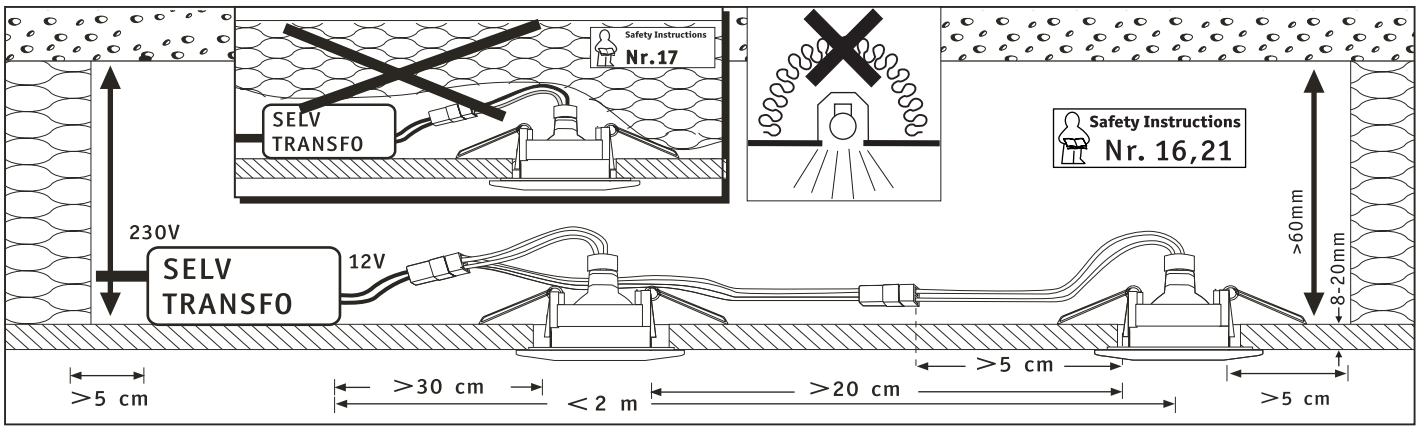

		> 90°C, F <04/2012, >04/2012		< 90°C, F <04/2012		< 90°C, M M	
M M	[mm]	Security [W]	[mm]	Security [W]	[mm]	Security [W]	[mm]
	73	50	60	35	60	50	90

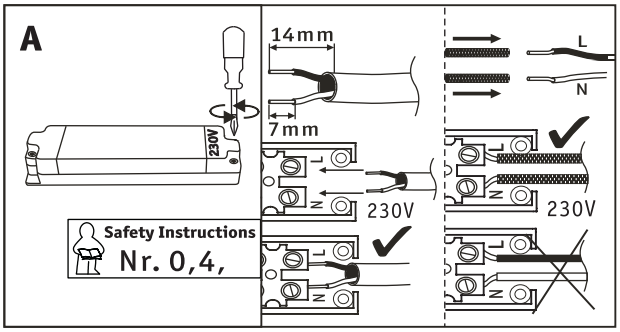

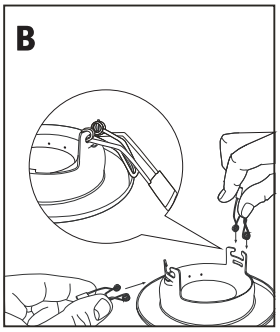

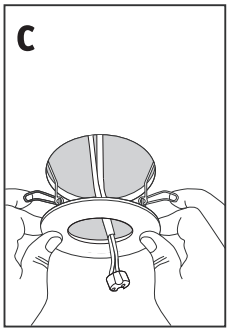

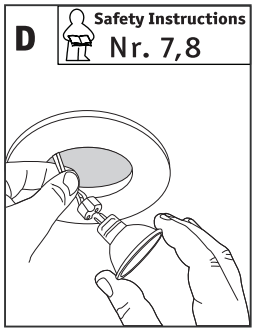

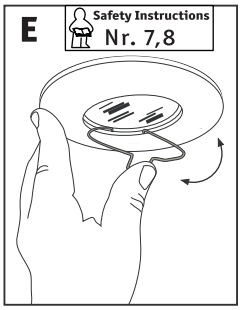

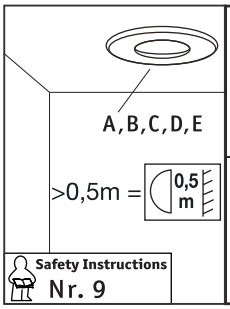

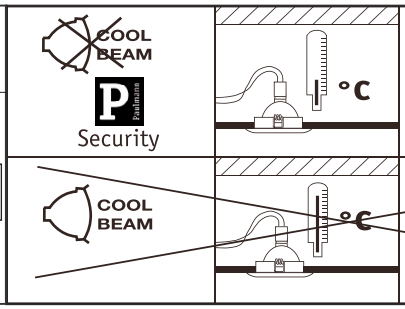

Art. No.		
20W	51mm GU5.3	832.44
35W	51mm GU5.3	832.45
50W	51mm GU5.3	832.46