# Paulmann

## Safety Instructions

0,1,4,5b,6,7,8,9,10,11
12,15,16,17,19,20,21
22,23,25


Info Hotline
+49 (0) 5041 998 389
Mon.-Do. 7⁰⁰-20⁰⁰
Fr. 7⁰⁰-17⁰⁰

Paulmann Licht GmbH
31832 Springe / Germany
www.paulmann.com


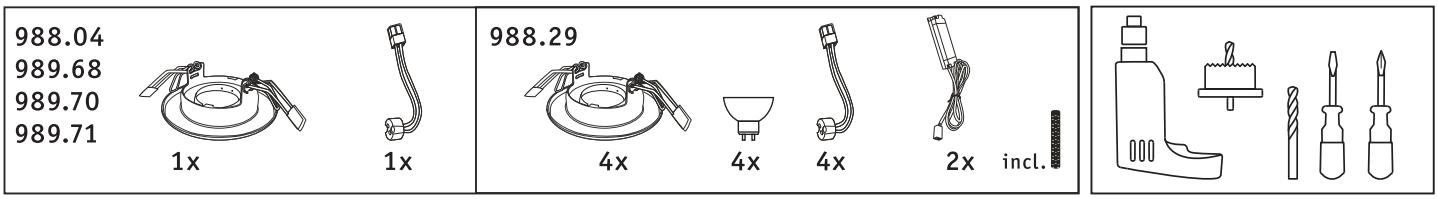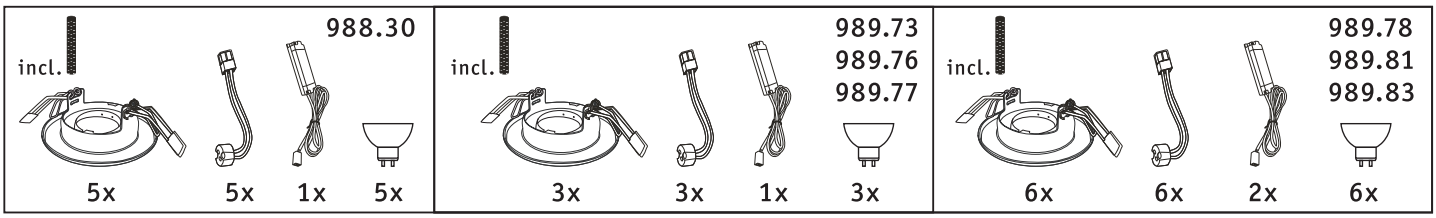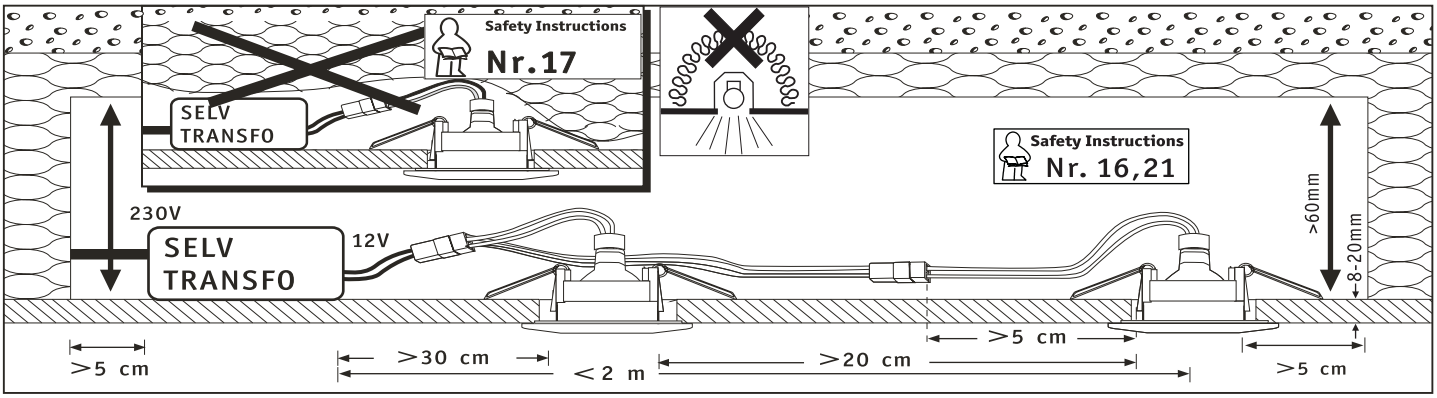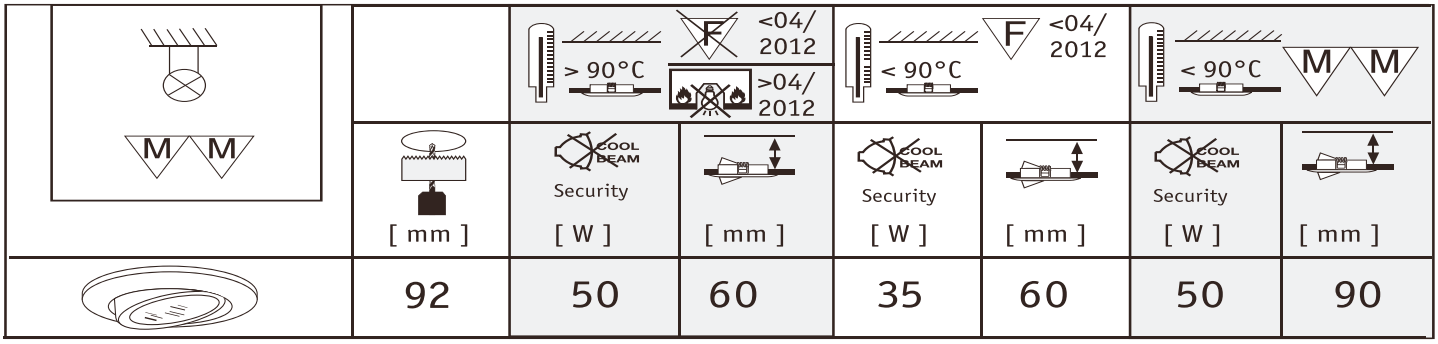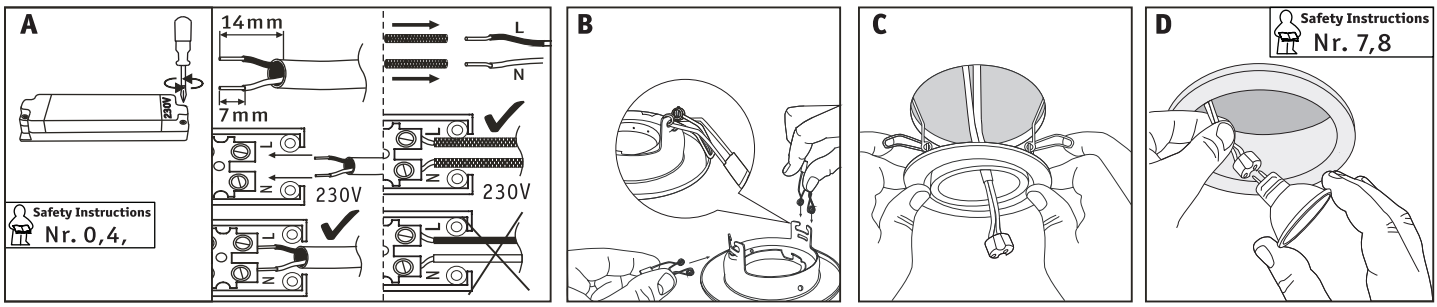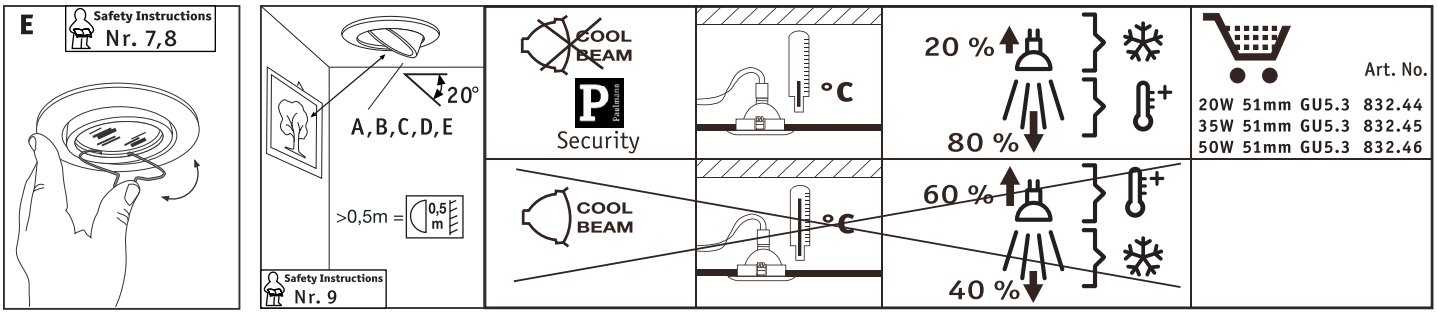
Art.-Nr.:
988.04/29/30
989.68/70/71/
73/76/77/78/
81/83
(+MA 173)
PBO 07/12