Paulmann

Safety Instructions

0, 1, 2, 4, 6, 7, 8, 9, 11, 15, 17, 18, 19, 22

Info Hotline

+49 (0) 5041 998 389

Mon. - Do. 7⁰⁰ - 20⁰⁰

Fr. 7⁰⁰ - 17⁰⁰

Paulmann Licht GmbH
31832 Springe / Germany
www.paulmann.com

Art.-Nr.:
994.79
994.80
994.81
994.82
994.83
994.85
(+MA 173)
PBO 05/12

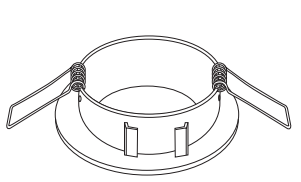

3x

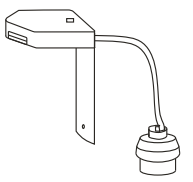

3x

3x

incl.

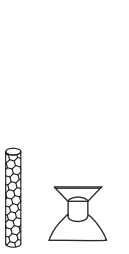

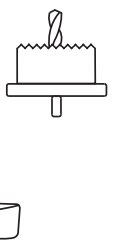

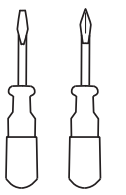

A

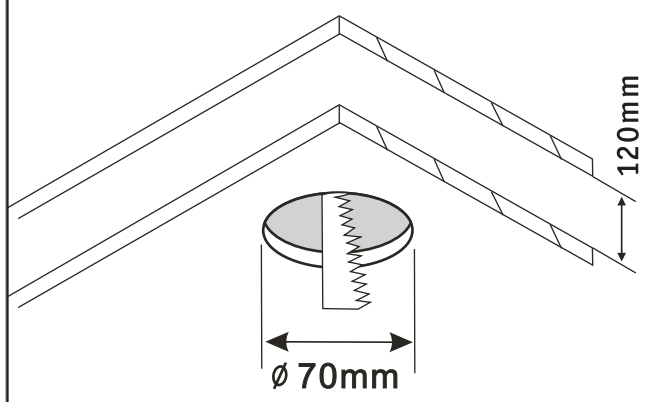

B

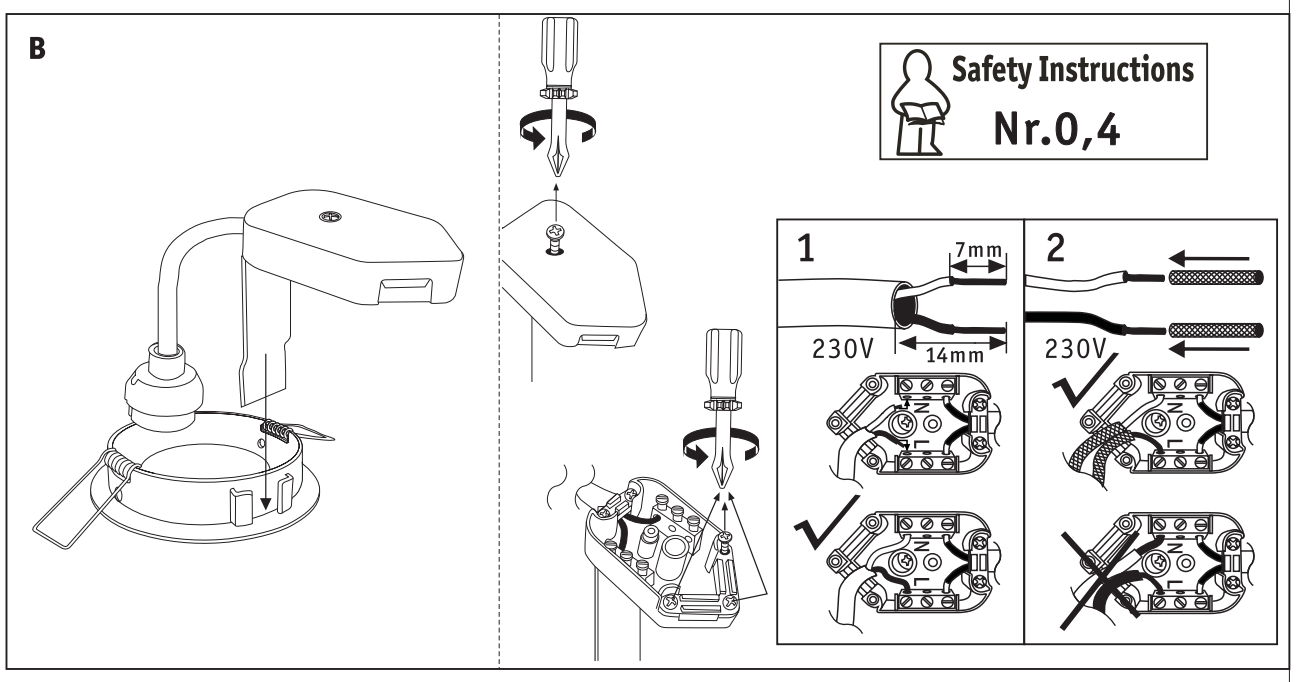

C

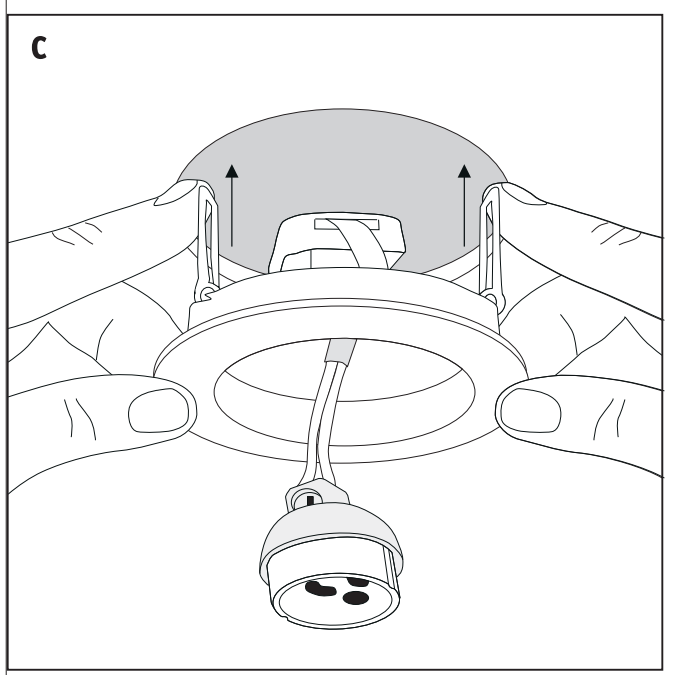

D

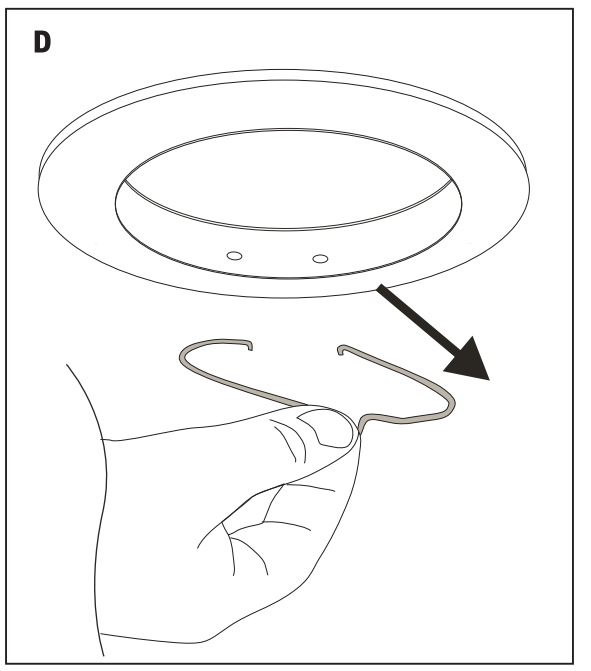

E

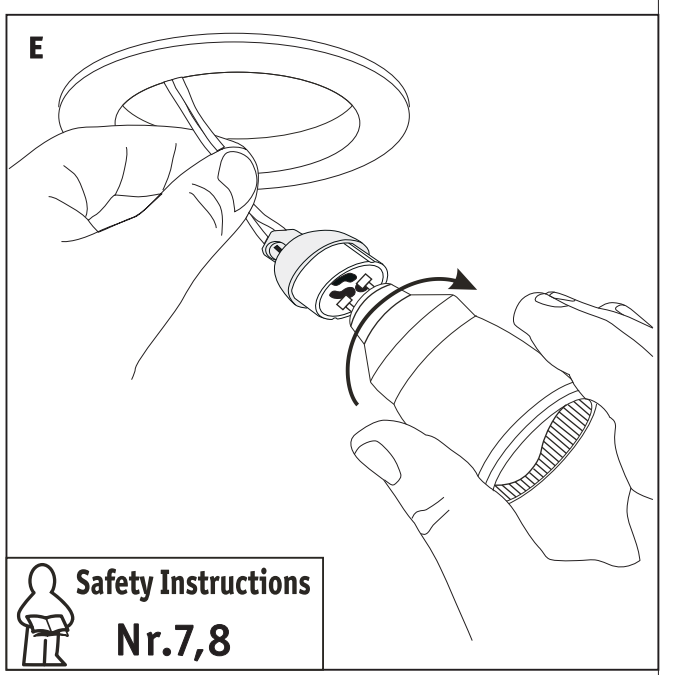

F

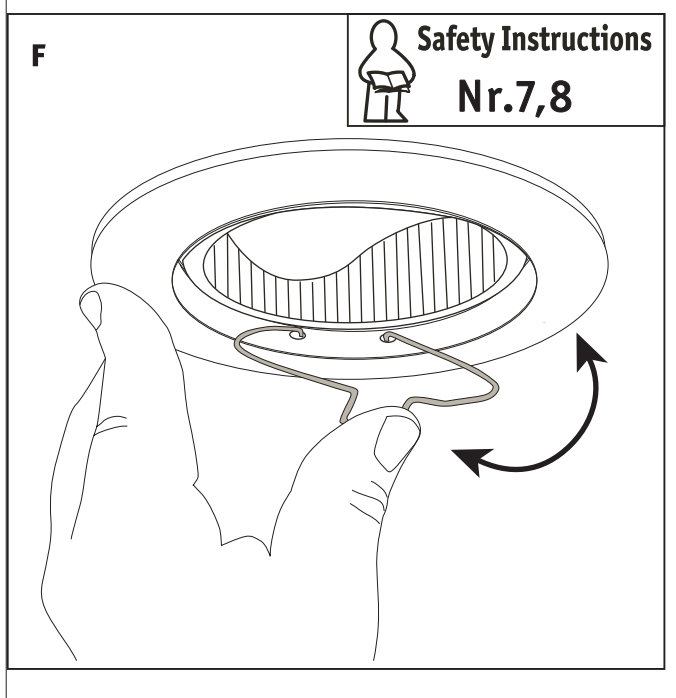
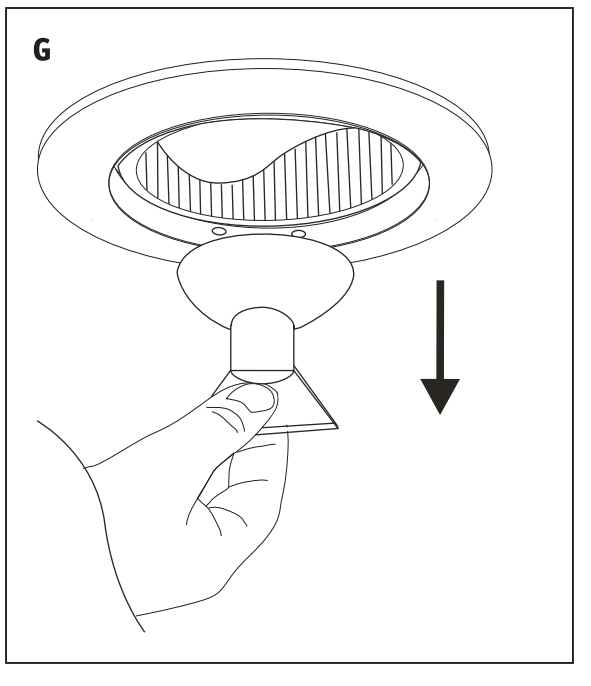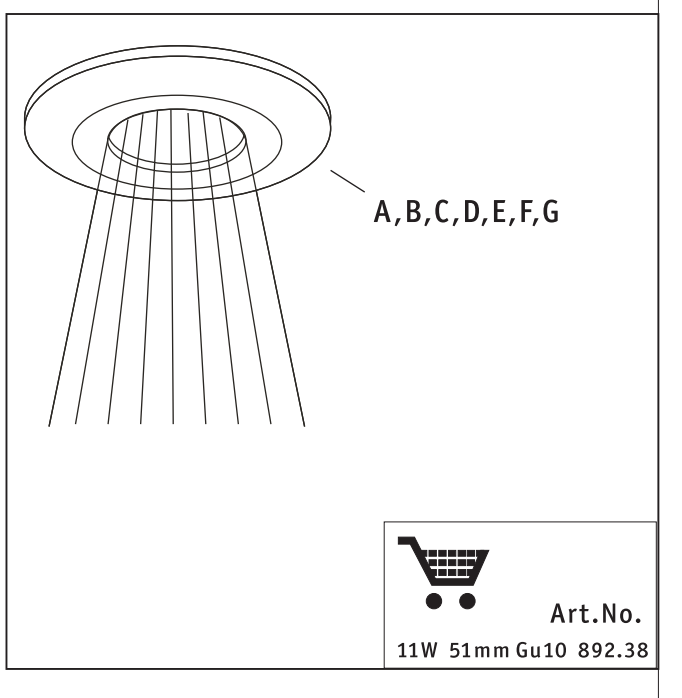
G