SAFETY INSTRUCTIONS

SAFETY INSTRUCTIONS

0,1,2,3,4,5,6,7,8,9,11,15,20,22
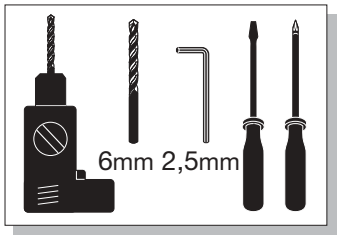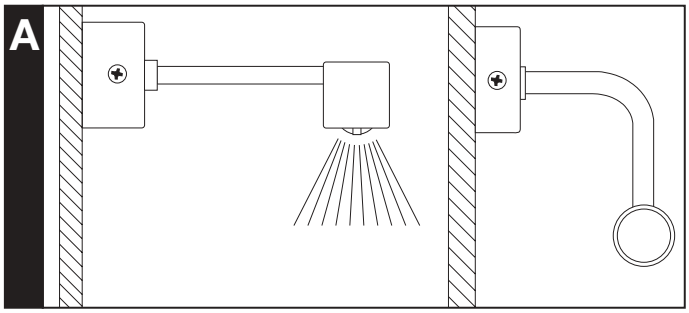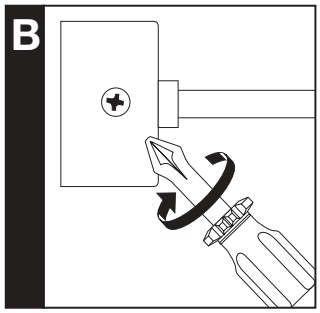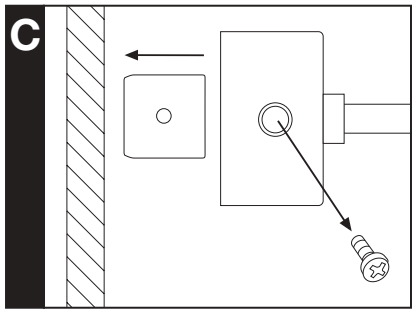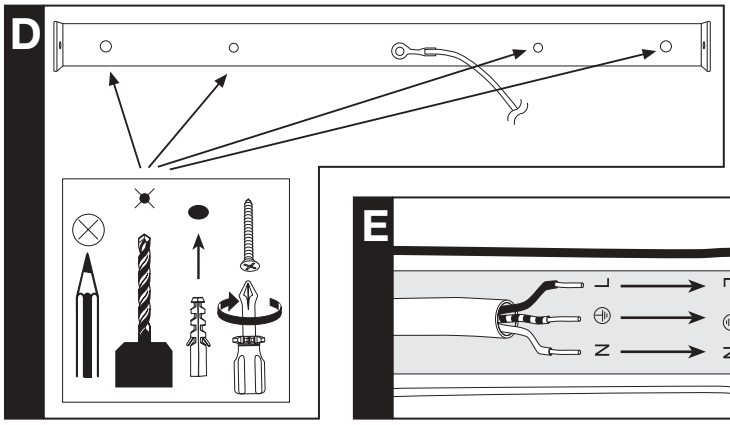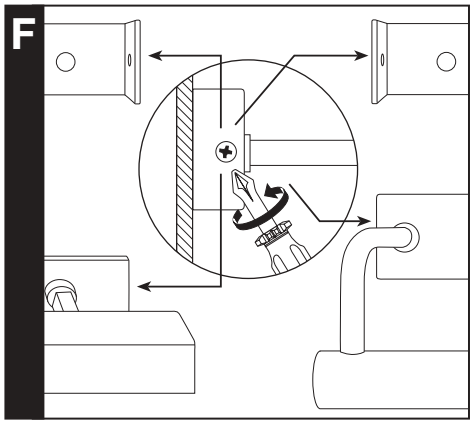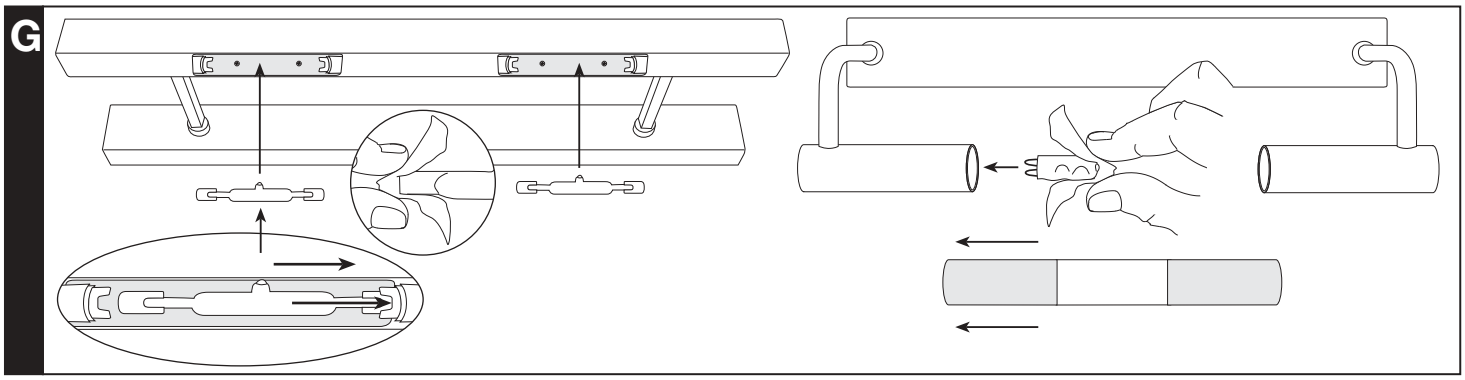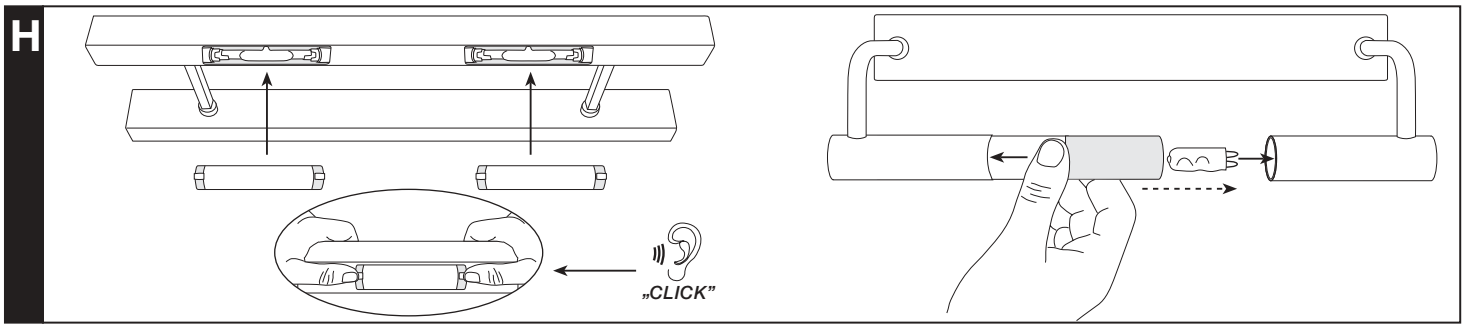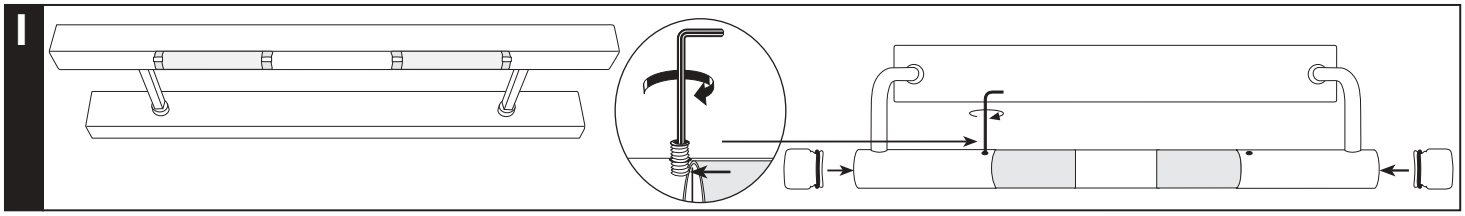
PAULMANN *LICHT* GmbH
Quezinger Feld 2 • D-31832 Springe
www.Paulmann.de